STANDARDS CODE 2-6232

5801067

SHEET 4 OF 4

CARD CODE 1067 | 5801067

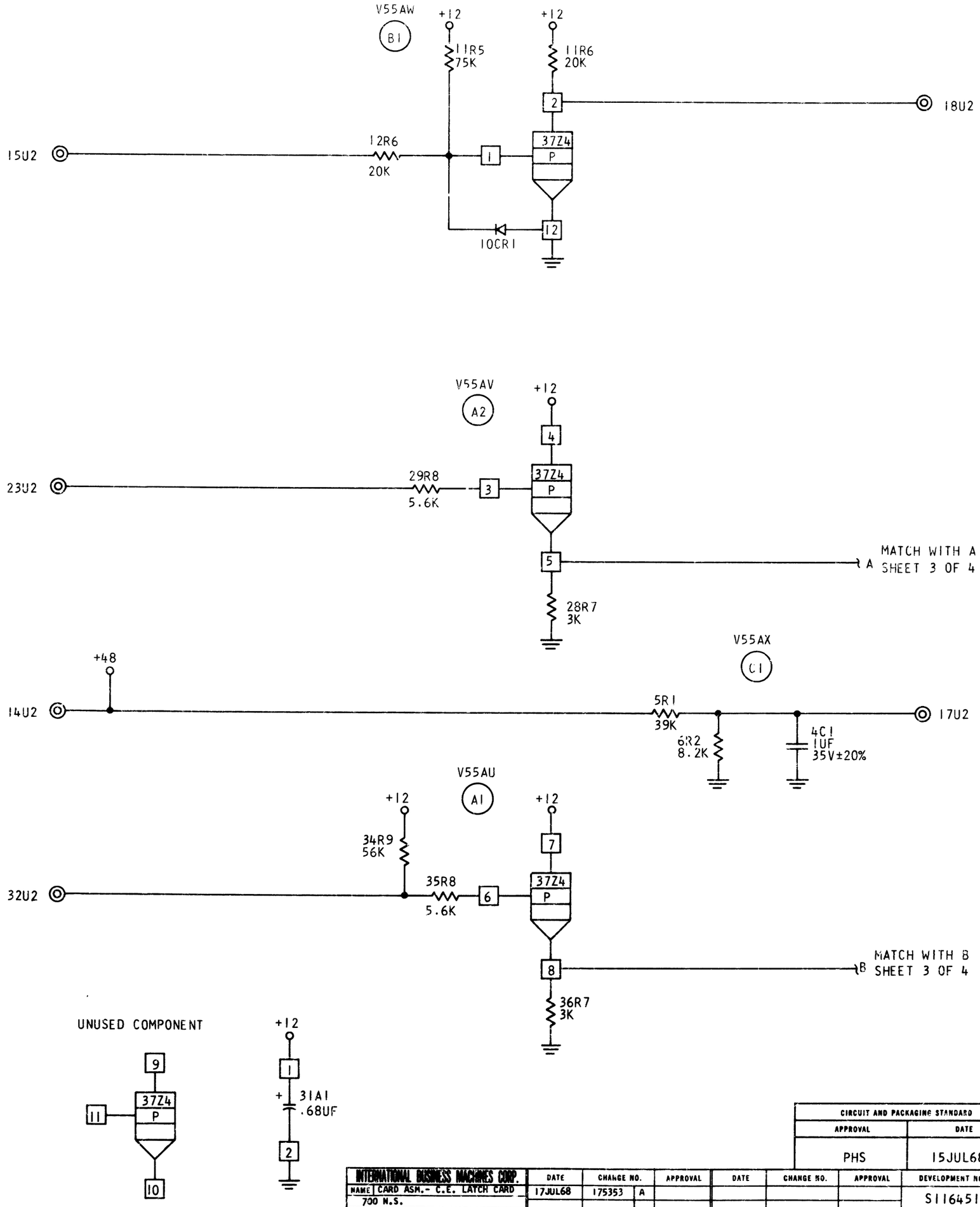

CIRCUIT AND PACKAGING STANDARD	
APPROVAL	DATE
PHS	15JUL68

INTERNATIONAL BUSINESS MACHINES CORP.													
NAME	CARD ASM.- C.E. LATCH CARD 700 N.S.					DATE	CHANGE NO.		APPROVAL	DATE	CHANGE NO.	APPROVAL	DEVELOPMENT NO.
DESIGN	ADC	15JUL68	MODEL			17JUL68	175353	A					S116451
DETAIL	ADC	15JUL68	SCALE	NONE									
CHECK	ADC	15JUL68	DRAW	VE	30AUG68								
APPRO	PHS	15JUL68	CHECK										

5801067

C

GRAPHIC CONTROLS CORP., BROOKLYN, N. Y. 11217 STOCK NO NEBOT

62C-9277-0 MRO # 780822108