STANDARD CODE 2-7045

5801100

CARD CODE 1100 | 5801100

SHEET 3 OF 3

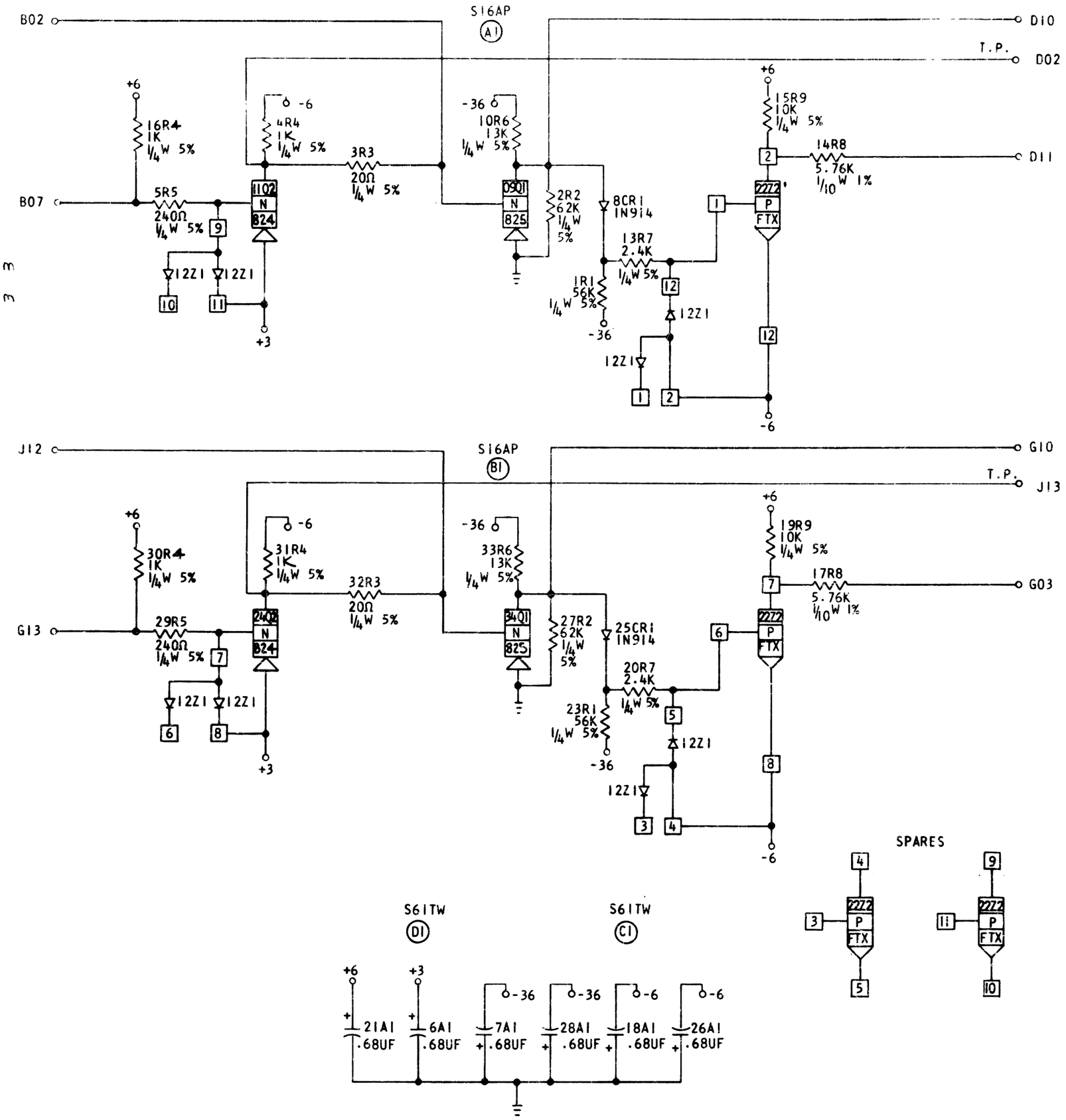

NOTE:

NO BUSSING CONDITION

CIRCUIT AND PACKAGING STANDARD	
APPROVAL	DATE

INTERNATIONAL BUSINESS MACHINES CORP.					DATE	CHANGE NO.	APPROVAL	DATE	CHANGE NO.	APPROVAL	DEVELOPMENT NO.
NAME	CARD ASM - Y SELECT				20MAR64	DEV 2383					5801100
					20MAR64	DEV 2479					
DESIGN			MODEL	1311 MIL	15JUL65	164268	A				
DETAIL	RZS	10-3-63	SCALE	NONE	24JAN68	172875	B				
CHECK	RHM	10-5-63	DRAW	VMD 2-6-64							
APPRO			CHECK	3-7-64							

5801100

C