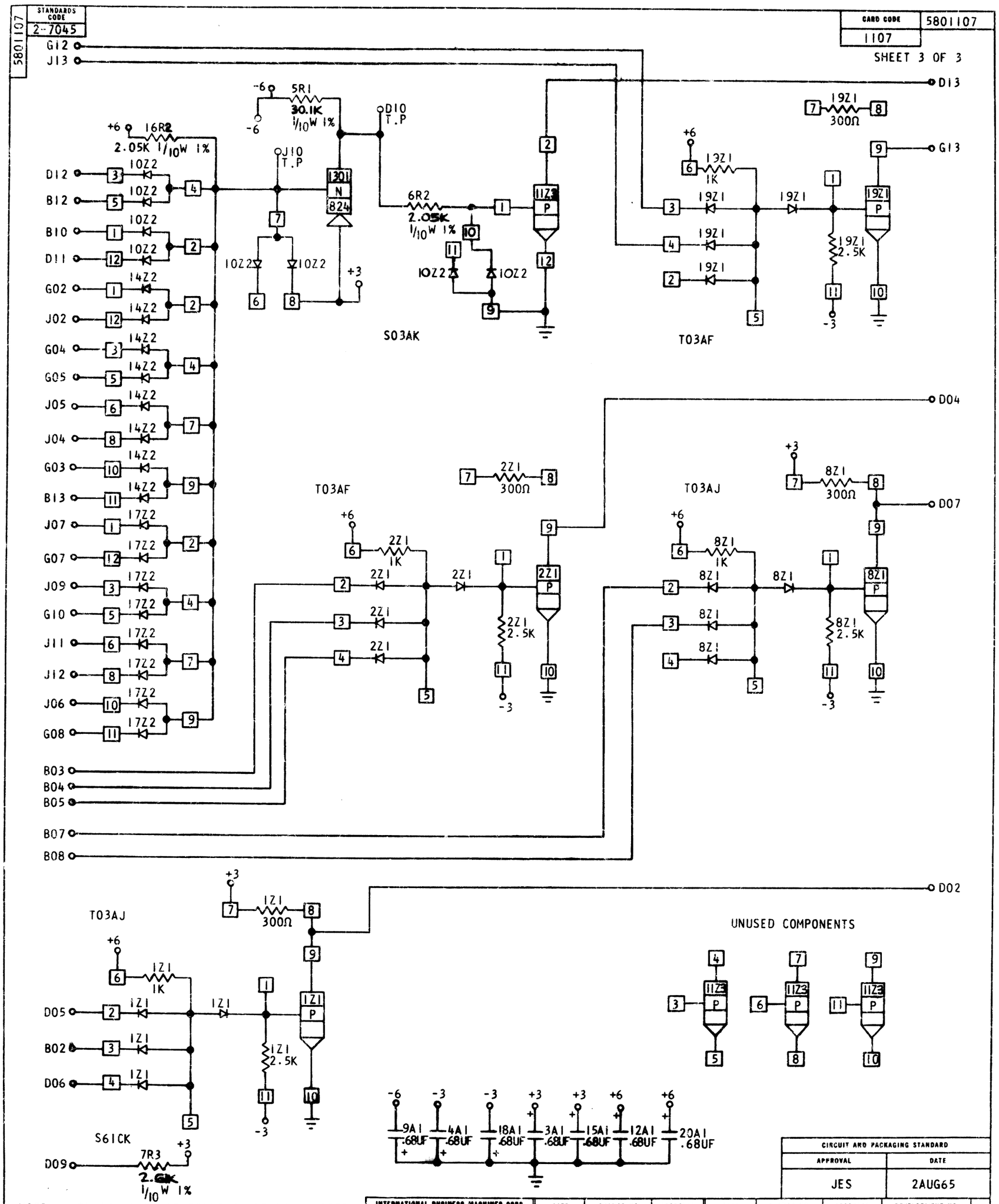

NOTE: VOLTAGE PINS AS FOLLOWS ARE NOT BUSSED
GND D08 J08 +6V B11 X G11, -3V B06 X G06,
+3V D03 X J03