STANDARDS CODE	2-7045

CARD CODE	5801108
1108	

SHEET 3 OF 3

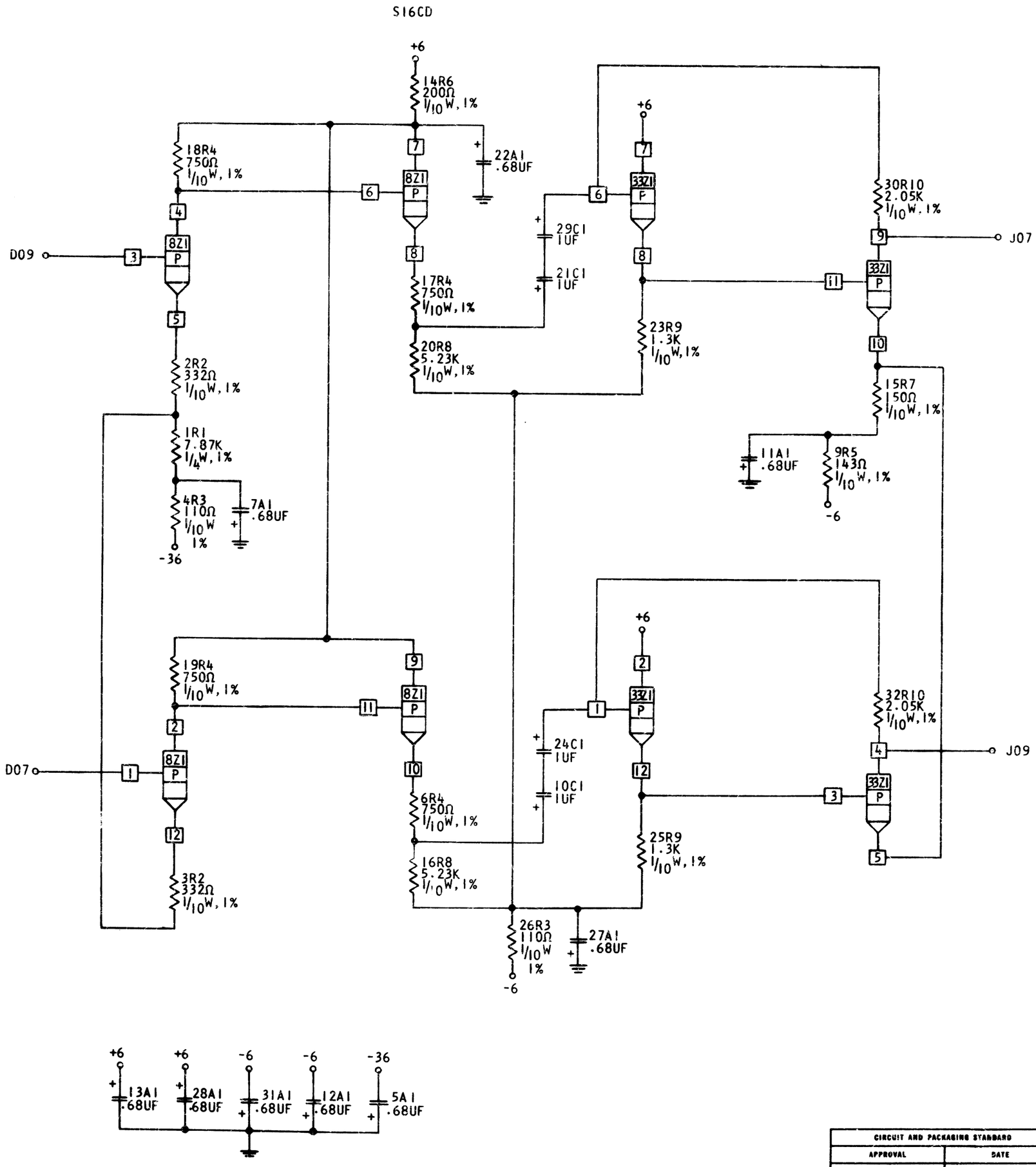

VOLTAGE PINS B11-G11, D08, J08, B09-G09, ARE NOT BUSSED

CIRCUIT AND PACKAGING STANDARD	
APPROVAL	DATE

INTERNATIONAL BUSINESS MACHINES CORP.													
NAME	CARD ASM - PRE-AMPLIFIER				DATE	CHANGE NO.	APPROVAL	DATE	CHANGE NO.	APPROVAL	DEVELOPMENT NO.	5801108
DESIGN		MODEL	131 MIL		1-22-64	DEV 2387						
DETAIL	RHM11-2-63	SCALE	NONE		5-1-64	DEV 2489						
CHECK	RZS 12-4-63	DRAW	VMD5-8-64		9AUG65	164700	A					
APPRO		CHECK									5801108	

C

C. B. CO., NO 374W 46106

FORM 83-081