5801116

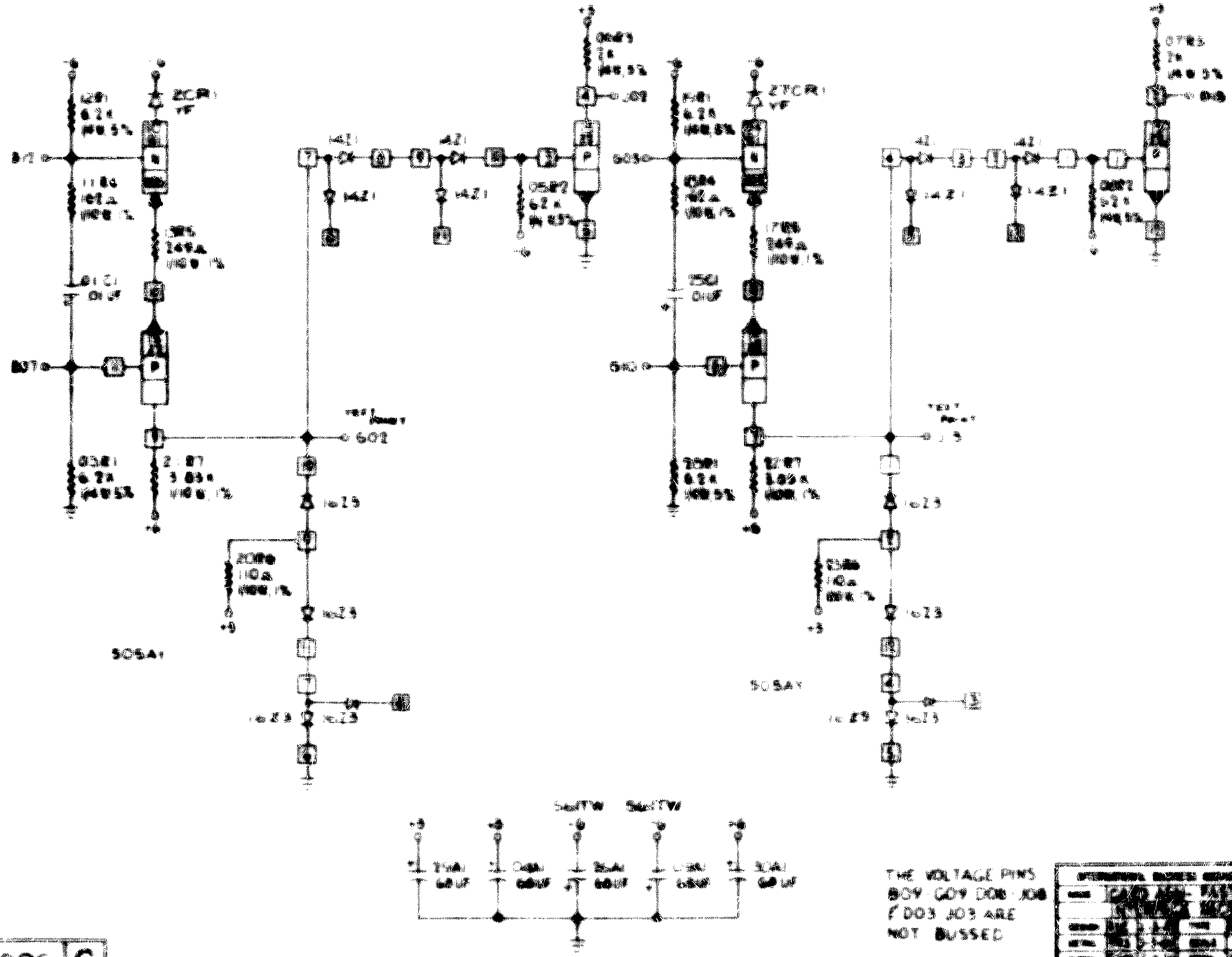

911095 C