580125

SHEET 3 OF 3

RESTRICTED

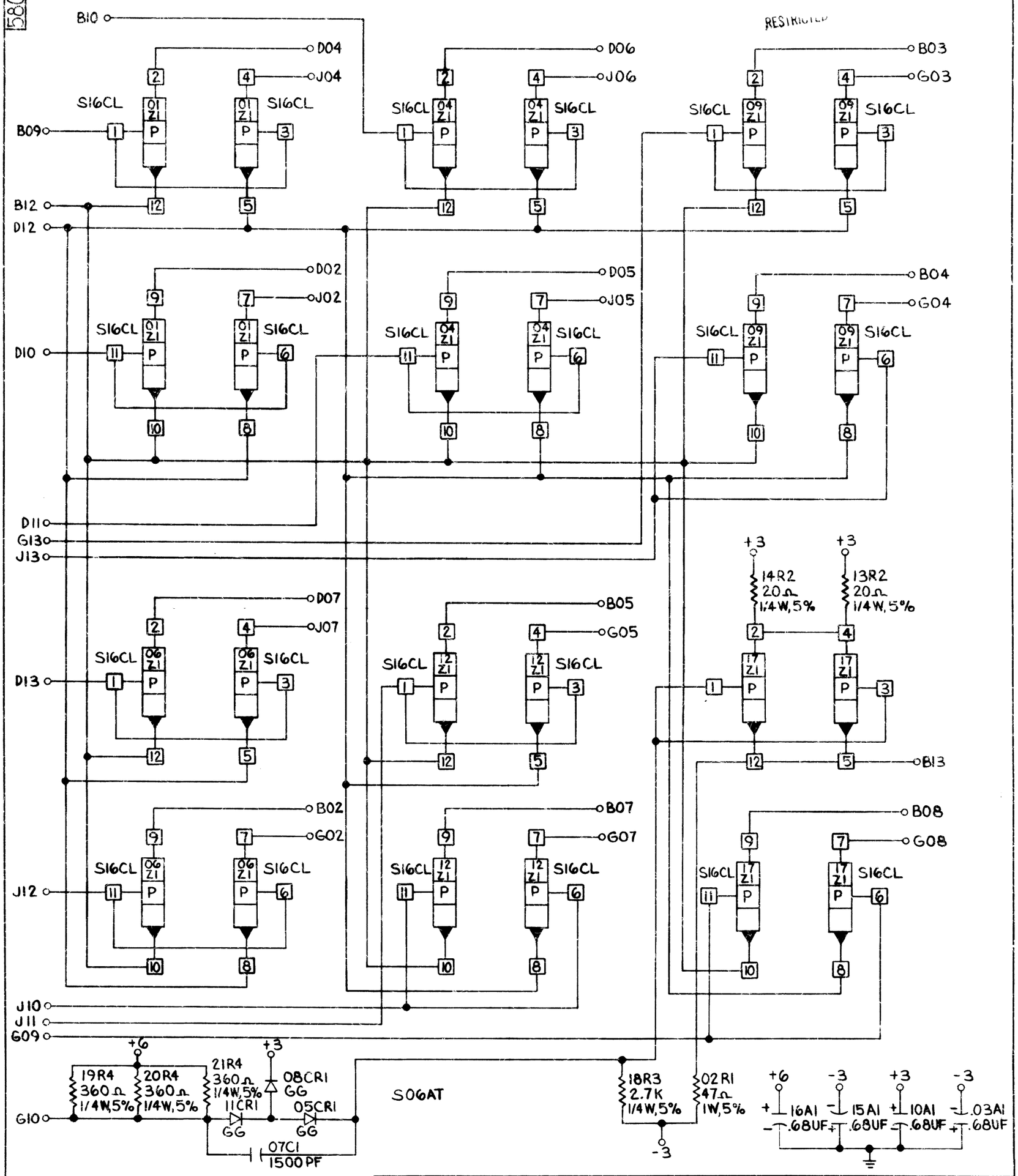

INTERNATIONAL BUSINESS MACHINES CORP.				DATE	CHANGE NO.	DATE	CHANGE NO.	NOTE	DEVELOPMENT NO.	580125
NAME	CARD ASM-SELECT BUS EMITTER DRIVER AND 22 ARRAY DRIVERS			10-8-64	160899			X PRINT TO ENG. SPEC. NO. 895291		
DESIGN	WSW 3-23-64	MODEL	5007							
DETAIL	WSW 3-23-64									
CHECK	WFB 4-23-4	DRAW	GT 9-29-64							
APPRO	WFB 9-25-4	CHECK								

FORM 80-6279-1

C. B. CO. NO. 44-511A 48478