5801128 STANDARDS CODE

SHEET 3 OF 3

RESTRICTED

CARD CODE 5801128

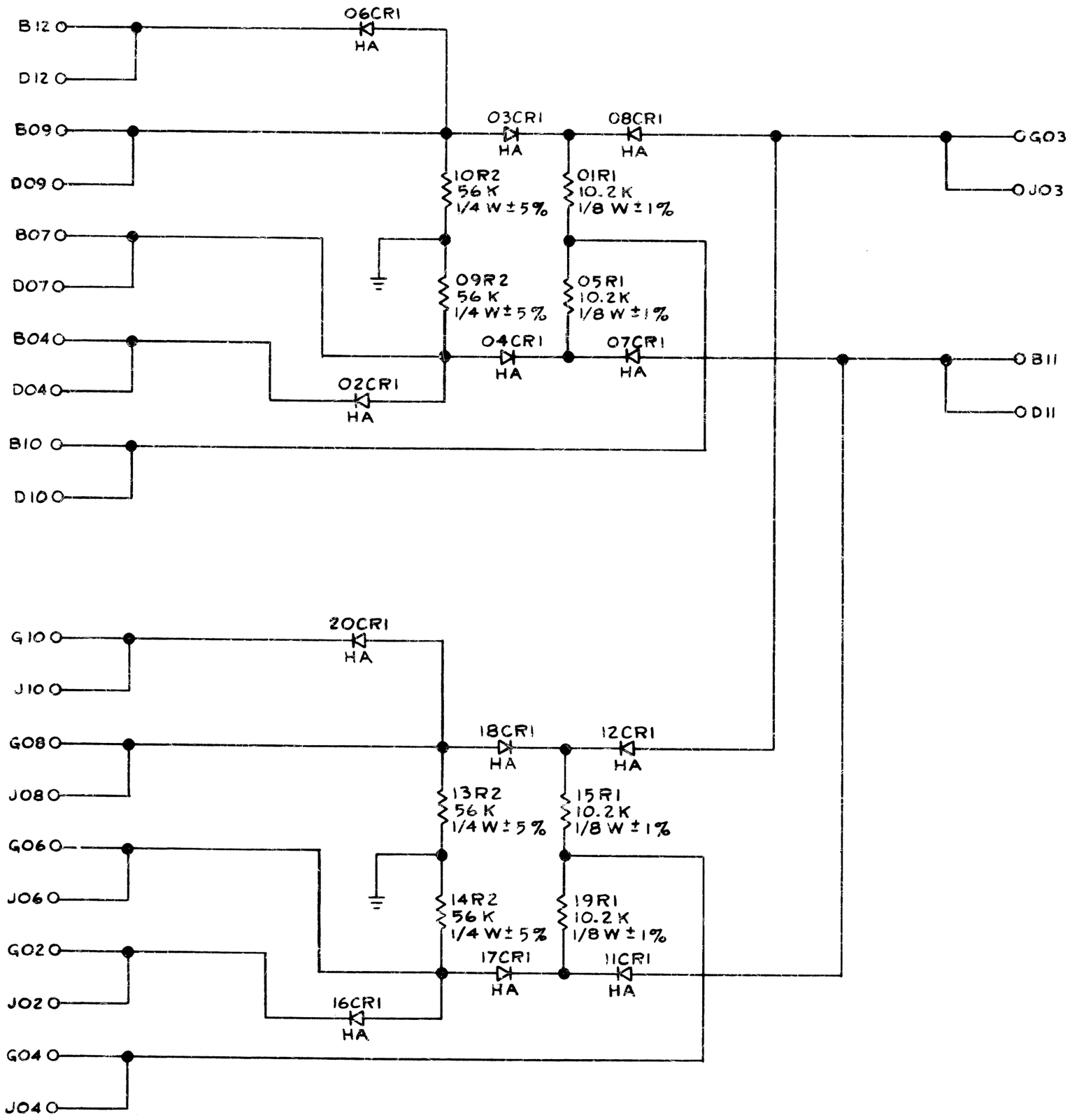

CIRCUIT AND PACKAGING STANDARD	
APPROVAL	DATE

INTERNATIONAL BUSINESS MACHINES CORP.						DATE	CHANGE NO.	APPROVAL	DATE	CHANGE NO.	APPROVAL	DEVELOPMENT NO.	5801128
NAME	READ - WRITE MATRIX					4-14-64	DEV2718					SS097	
DESIGN	PRH	2-13-4	MODEL			6-3-64	160295						
DETAIL	PRH	2-13-4	SCALE	NONE									
CHECK	EC	2-13-4	DRAW	MG	2-20-64								
APPRO			CHECK	RO	2-25-4								

C

C. B. CO., NO 2719 4-1-64