STANDARDS CODE

RESTRICTED

CARD CODE 5801135

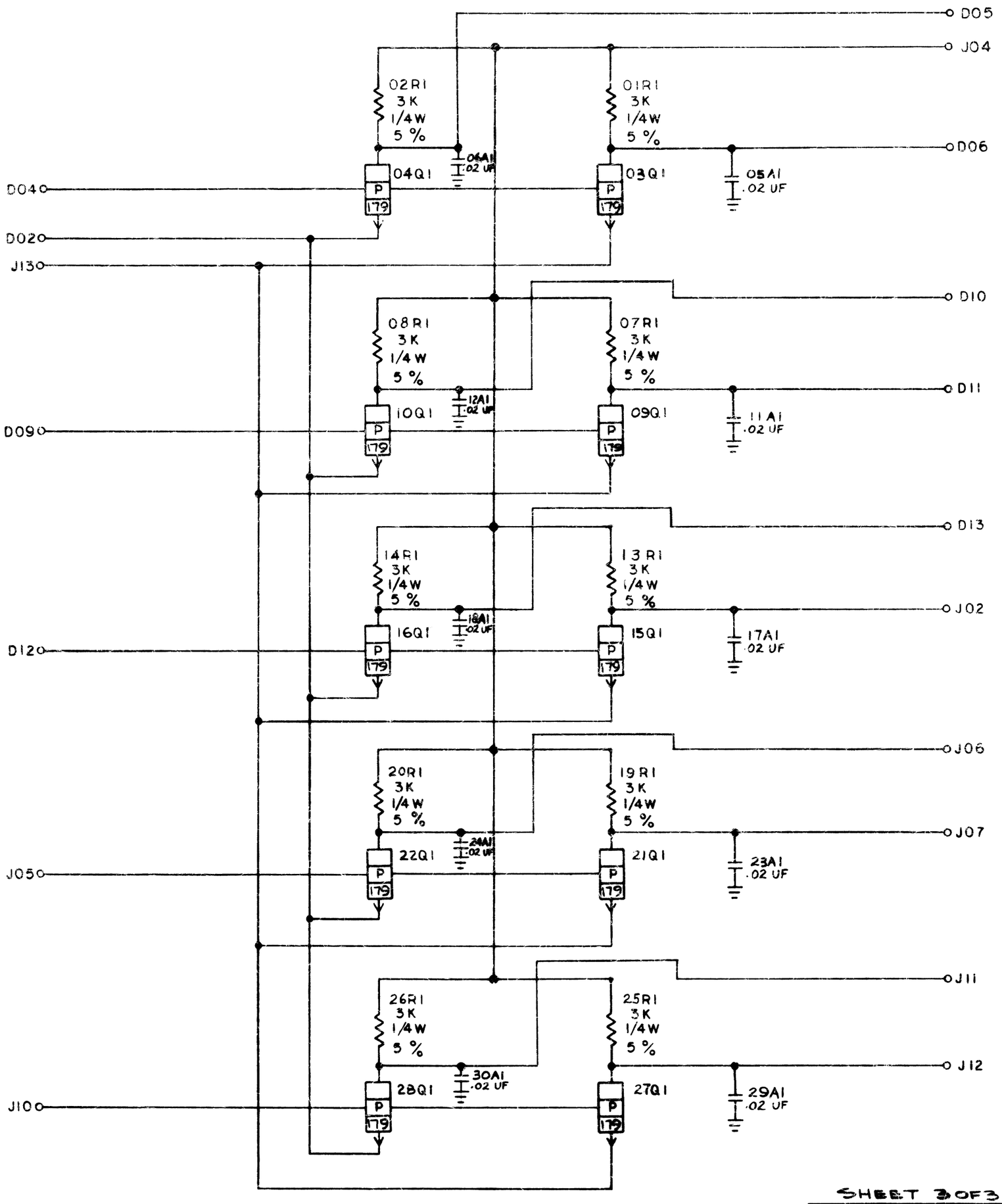

SHEET 3 OF 3

CIRCUIT AND PACKAGING STANDARD	
APPROVAL	DATE

INTERNATIONAL BUSINESS MACHINES CORP.						DATE	CHANGE NO.	APPROVAL	DATE	CHANGE NO.	APPROVAL	DEVELOPMENT NO.
NAME	Y-SELECT #2					4-1-64	DEV 2180					S119031
						10-16-64	161657					
DESIGN	LC	10-22-64	MODEL	2321		6-11-65	164775 B					
DETAIL	LC	10-22-64	SCALE	NONE								
CHECK	JH	10-24-64	DRAW	EDD	12-20-63							5801135
APPRO			CHECK									

5801135

C