STANDARDS CODE	2-7045			5801149
CIRCUIT APPROVAL	IF	07-29-64	STATUS	ACTIVE
LOCATION	SAN JOSE			RESTRICTED
RAW CARD NUMBER	5816733 1		HOLE PATTERN	5816733
FRONT ARTWORK	DATE	CHANGE NO.	DATE	CHANGE NO
5816733	04-01-64	DEV2702		
BACK ARTWORK	08-13-64	161074		
5816733				

PIN	VOLT.
J08	GR
G10	-36
J08	GR

CODE	PART NO	VALUE				QTY
R 1	550020	1.000K	.12	+	1	1
R 2	492573	5.000K	1.	+	5	1
R 3	2163445	15.600K	.10	+	.5	1
R 4	323920	3.000K	.50	+	5	1
R 5	479148	6.340K	.12	+	1	1
R 6	317428	330.000	.50	+	5	1
CR 1	369593	DN				1
CR 2	597977	DT				1
CR 3	491229	QT				5
CR 4	369611	DY				3
Q 1	369390	084 NPN				1
HB	811399					1

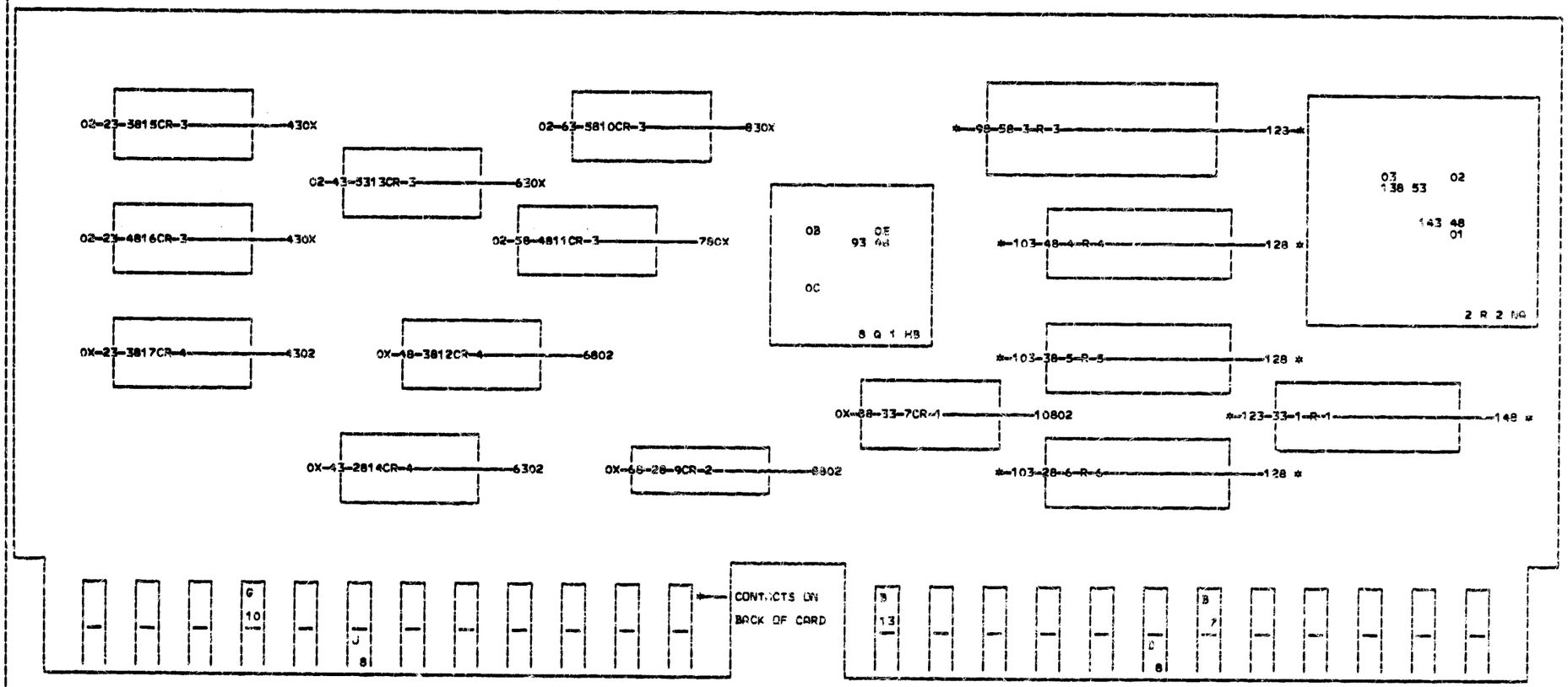

NOTES:

AA-ALL CIRCUITS MUST CONFORM TO ENG.SPEC. SHOWN ON SHEET 1.

AB-ASSEMBLE TO ENGINEERING SPECIFCATION 890913

AL-CARD HAS NOT BEEN DECOUPLED 811800 IS NOT APPLICABLE.

FA-TECH LAB EVALUATION INCOMPLETE. PART SUBJECT TO WITHDRAWAL.
ADDITIONAL USAGE TO BE AVOIDED

HB-ASSEMBLE WITH P/N 811399 #TO-5# SPACER.

NA-PART MUST NOT BE SUBJECTED TO ANY LIQUID.

INTERNATIONAL BUSINESS MACHINES CORP.

NAME	SUMMING AMP CURRENT SOURCE				
DESIGN	02-25-64	RT	TYPE	2321	
DETAIL	02-25-64	RT	SCALE	NONE	
CHECK	02-26-64	FC	DRAW	7090	09-04-64
APPRO	02-26-64	SMS	SHEET 2 OF 3		

5801149