5801166

STANDARDS CODE

CARD CODE 5801166

SHEET 3 OF 3

SHEET 3 OF 3

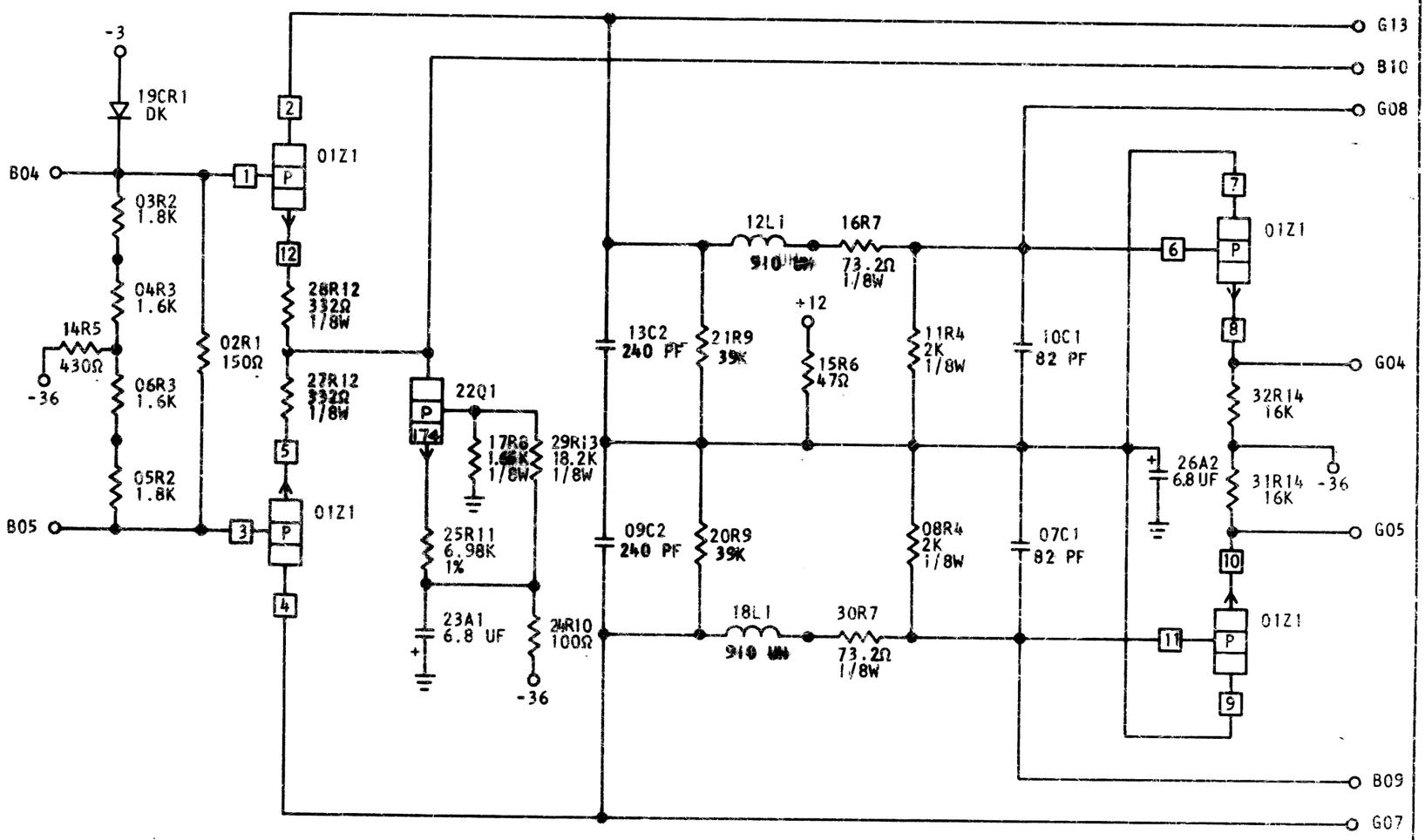

CIRCUIT AND PACKAGING STANDARD	
APPROVAL	DATE

INTERNATIONAL BUSINESS MACHINES CORP.						DATE	CHANGE NO.	APPROVAL	DATE	CHANGE NO.	APPROVAL	DEVELOPMENT NO.	
NAME	PREAMP & FILTER					~~2-10-64~~	DEV 2725					SS041	5801166
						~~10-10-64~~	161658						
DESIGN	CG 2-6-4	MODEL	2321			1-4-65	162784						
DETAIL	CG 2-6-4	SCALE	NONE										
CHECK	HV 10-5-4	DRAW	AS 10-5-4										
APPRO		CHECK										5801166	

C