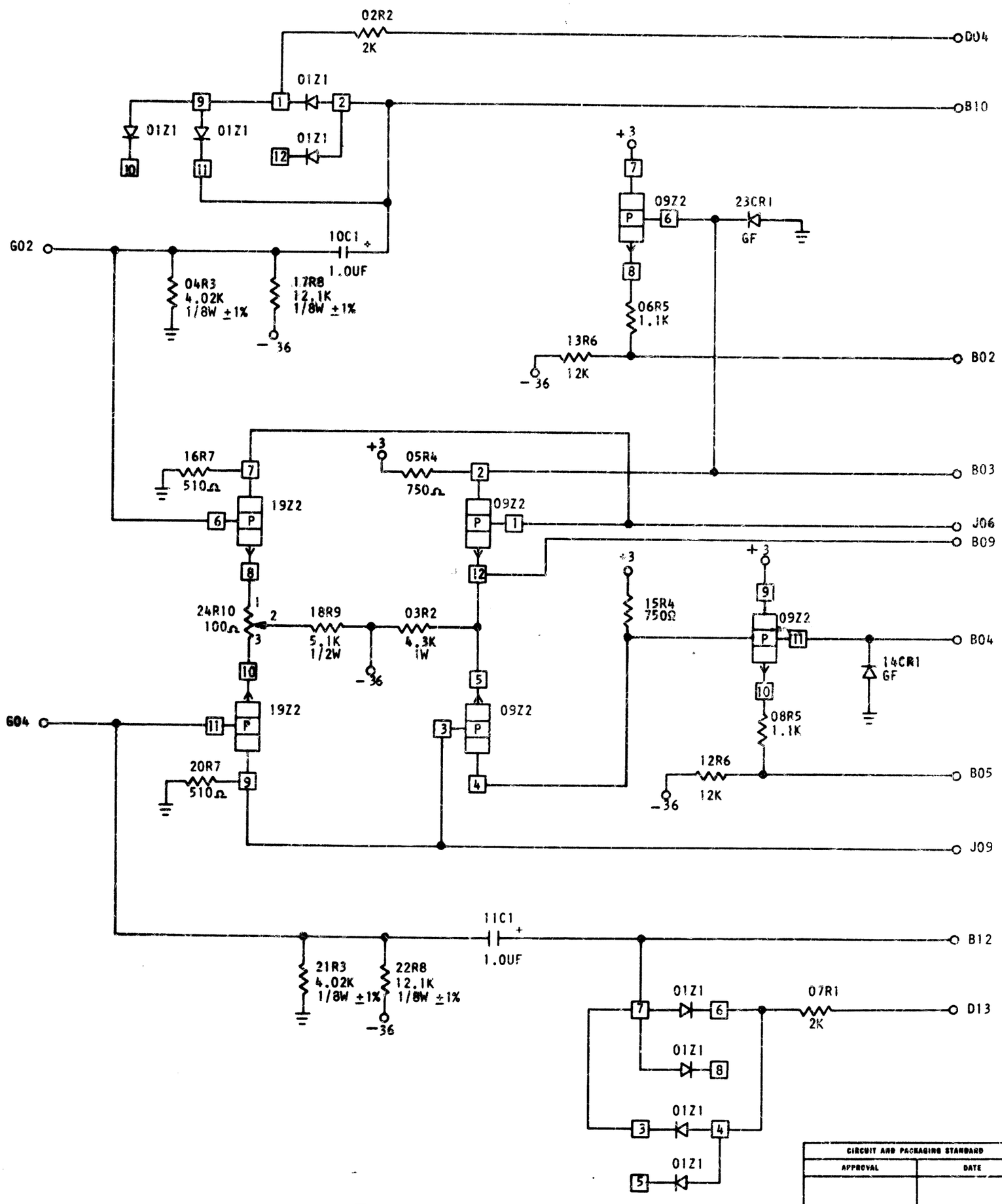

CIRCUIT AND PACKAGING STANDARD	
APPROVAL	DATE

INTERNATIONAL BUSINESS MACHINES CORP.	DATE	CHANGE NO.	APPROVAL	DATE	CHANGE NO.	APPROVAL	DEVELOPMENT NO.	
NAME LIMIT & LIMIT		161659					SS009	5801169
DRAWN JHB 2321								
DETAIL JHB NONE								
CHECK HV 10-1-4 DATE HD 10-2-4								
APPRO CHECK							5801169	

C