STANDARDS CODE 2-6232

CARD CODE 1181

SHEET 3 OF 4

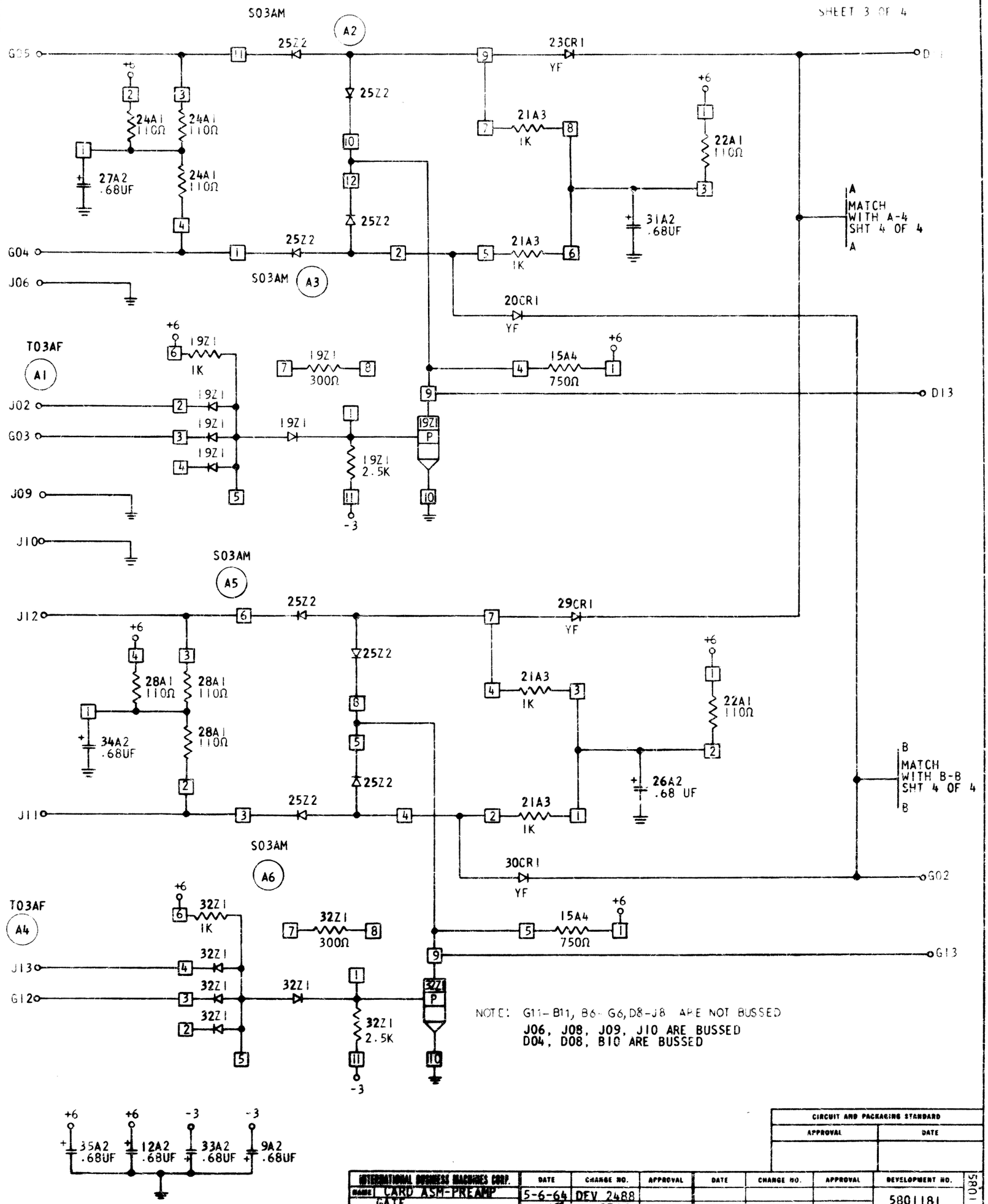

NOTE: G11-B11, B6-G6, D8-J8 ARE NOT BUSSED
J06, J08, J09, J10 ARE BUSSED
D04, D08, B10 ARE BUSSED

CIRCUIT AND PACKAGING STANDARD	
APPROVAL	DATE

INTERNATIONAL BUSINESS MACHINES CORP.

NAME	CARD ASM-PREAMP GATE		
DESIGN		MODEL	
DETAIL	RFM 1-3-64	SCALE	NONE
CHECK	RZS 1-9-64	DRAW	WMD 6-22-64
APPRO		CHECK	

DATE	CHANGE NO.	APPROVAL	DATE	CHANGE NO.	APPROVAL	DEVELOPMENT NO.
5-6-64	DEV 2488					5801181
1-3-65	DEV 2535					
13AUG65	164698 A					
20DEC65	166125 B					
15DEC67	172879 C					

5801181

C