5801193

STANDARDS CODE 2-7045

CARD CODE 5801193

SHEET 3 OF 3

RESTRICTED

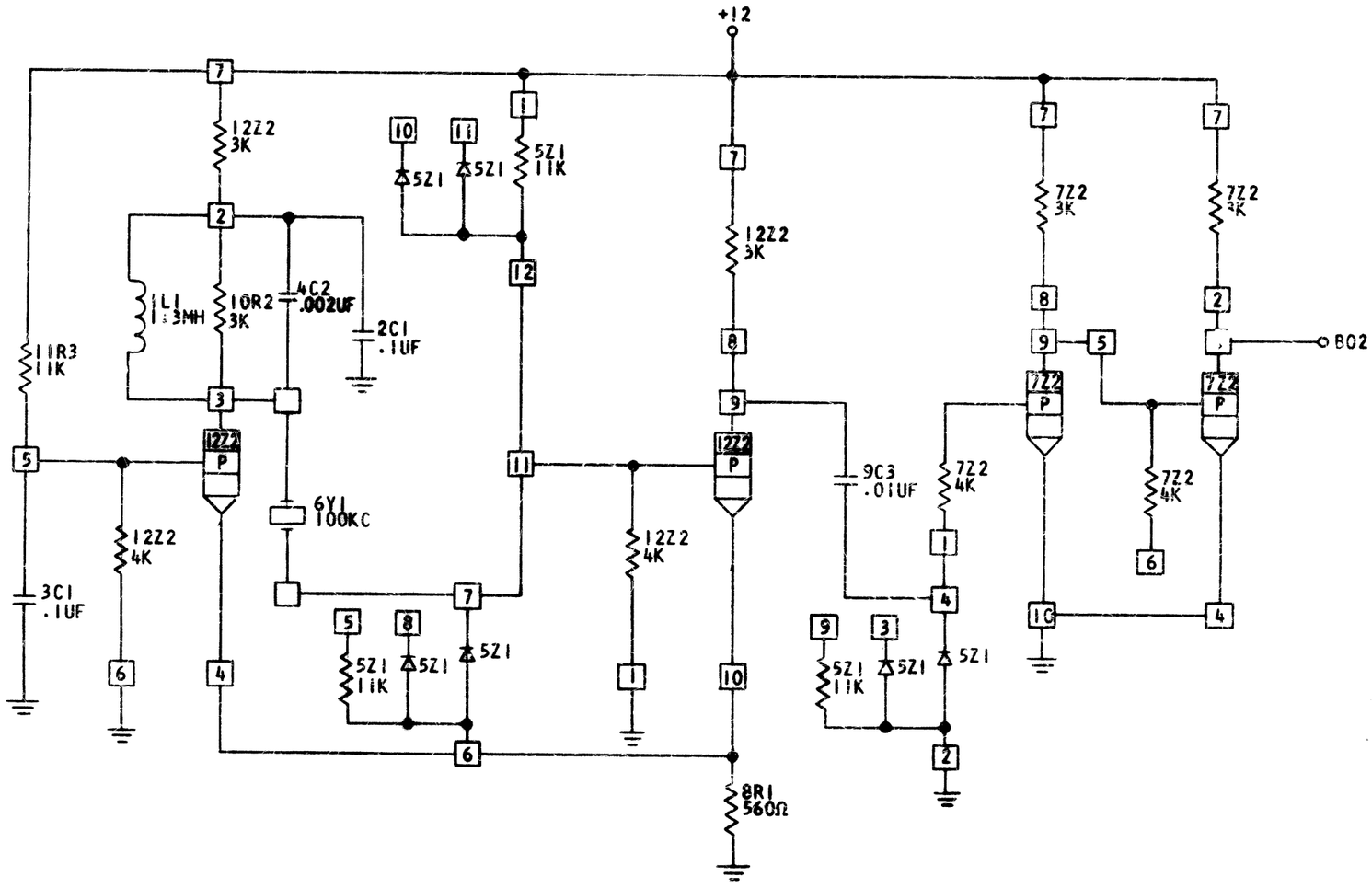

CIRCUIT AND PACKAGING STANDARD	
APPROVAL	DATE

INTERNATIONAL BUSINESS MACHINES CORP.	DATE	CHANGE NO.	APPROVAL	DATE	CHANGE NO.	APPROVAL	DEVELOPMENT NO.
NAME: TWO KC OSCILLATOR	2-18-66	Dev 25581					
	4-18-66	160253					
DESIGNED: 12Z1 12Z2 MODEL:							
DETAILED: MODULE:							
CHECKED: DATE:							
APPRD: DRAWN: DK 2-10-66							

5801193

C