STANDARDS CODE 5801210

CARD CODE 5801210

RESTRICTED

SHEET 3 OF 3

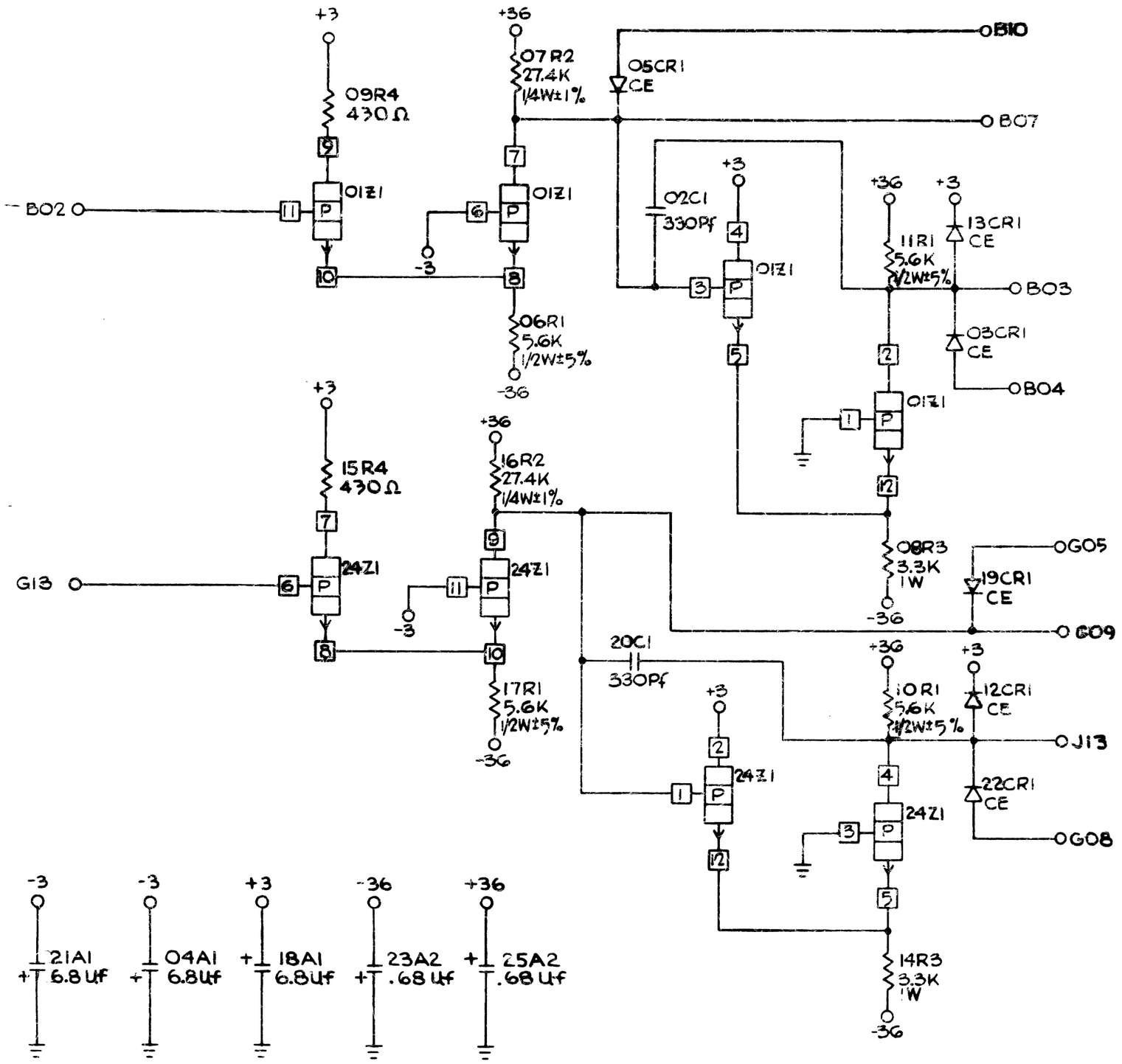

NOTES:
RESISTORS 1/4W ±5% UNLESS OTHERWISE NOTED

CIRCUIT AND PACKAGING STANDARD	
APPROVAL	DATE

INTERNATIONAL BUSINESS MACHINES CORP.						DATE	CHANGE NO.	APPROVAL	DATE	CHANGE NO.	APPROVAL	DEVELOPMENT NO.
NAME	INTEGRATOR STROBE					4-14-64	DEV 2758					55134
						6-5-64	DEV 3098					
DESIGN	PRH	3-18-4	MODEL	2821		9-23-64	161995					
DETAIL	MRL	3-27-4	SCALE	NONE		1-14-65	182776					5801210
CHECK	RT	9-25-4	DRAW	MRL								
APPRO			CHECK	RO	3-26-4							

5801210

C

C. B. CO., NO. 57-W 43166