STANDARDS CODE

5801211

CARD CODE 5801211

SHEET 3 OF 3

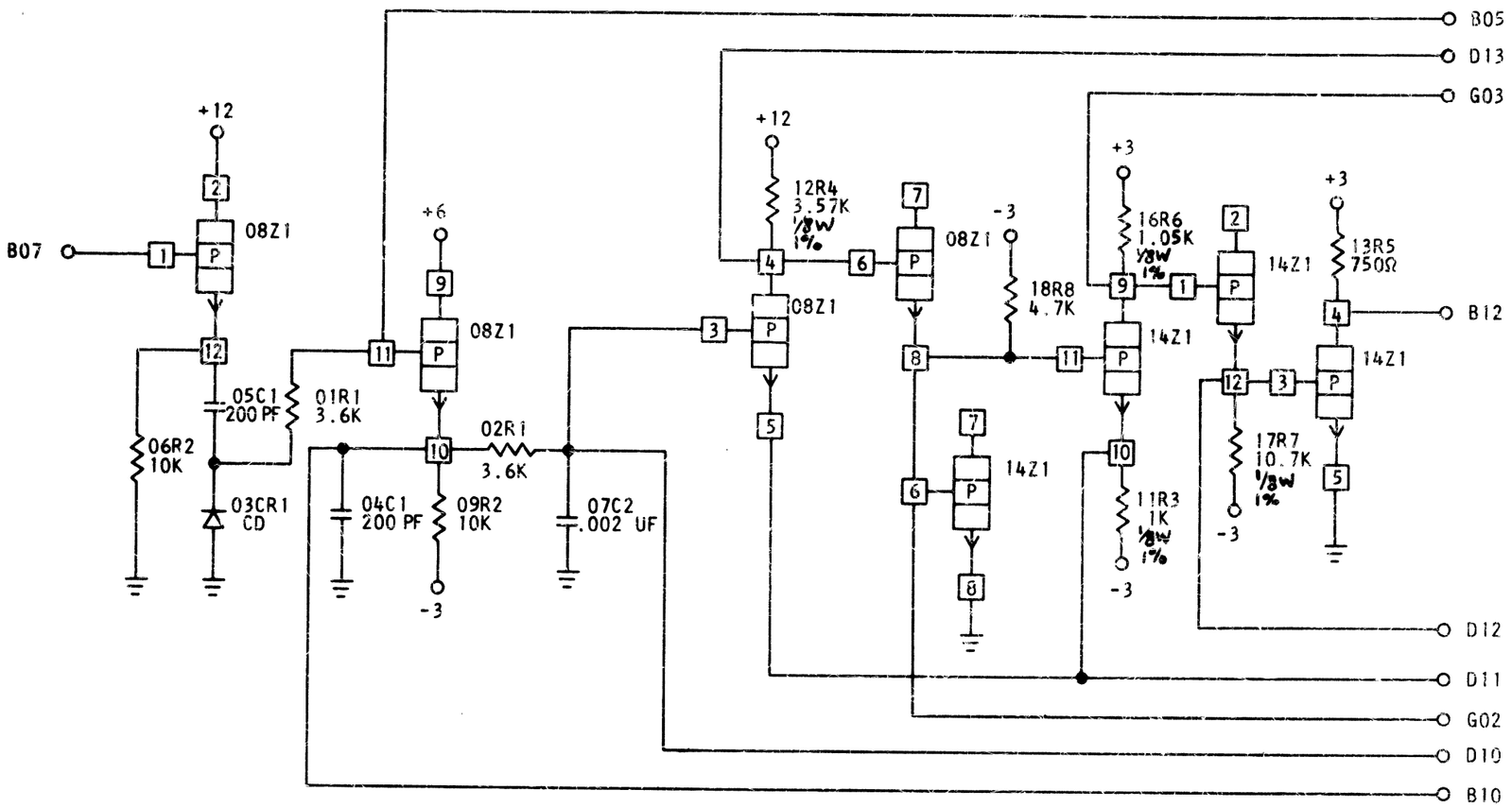

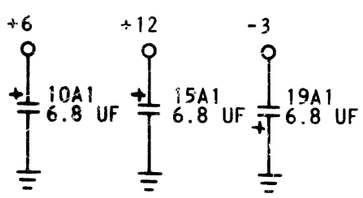

RESTRICTED

CIRCUIT AND PACKAGING STANDARD	
APPROVAL	DATE

INTERNATIONAL BUSINESS MACHINES CORP.				DATE	CHANGE NO.	APPROVAL	DATE	CHANGE NO.	APPROVAL	DEVELOPMENT NO.	5801211
NAME	DETECTOR AMPLIFIER			6-5-64	DEV 2761					SS285	
DESIGN	AMT 10-28-64	MODEL	2321	11-4-64	161662						
DETAIL		SCALE	NONE								
CHECK	11-2-64	DRAW	AMS 1031-4								
APPRO		CHECK								5801211	

C

FORM 68 901