STANDARDS CODE	2-7045			5801216
CIRCUIT APPROVAL	IE	08-14-64	STATUS	ACTIVE
LOCATION	SAN JOSE			RESTRICTED
RAW CARD NUMBER	5816889 1		HOLE PATTERN	5816889
FRONT ARTWORK	DATE	CHANGE NO.	DATE	CHANGE NO
5816889	07-30-64	DEV2767		
BACK ARTWORK	09-22-64	161329		
5816889				

PIN	VOLT.
B06	-03
B11	+06
G12	+36
D03	+03
D08	GR
J08	GR

CODE	PART NO	VALUE			QTY
R 1	216443	750.000	.25	+ 5	4
R 2	216461	5.100K	.25	+ 5	2
R 3	216465	7.500K	.25	+ 5	1
R 4	479160	10.000K	.12	+ 1	3
R 5	216469	11.000K	.25	+ 5	1
R 6	481591	2.490K	.50	+ 1	1
R 7	216468	10.000K	.25	+ 5	1
R 8	479173	14.000K	.12	+ 1	1
CR 1	369117	CD			1
Q 1	2414877	136 PNP			2
Q 2	369687	179 NPN			1
Z 1	361453	SLT MODULE			2
Z 2	361456	SLT MODULE			1
Z 3	361497	SLT MODULE			1
Z 4	361459	SLT MODULE			1
Z 5	361451	SLT MODULE			1
HA	811157	SPACER			3

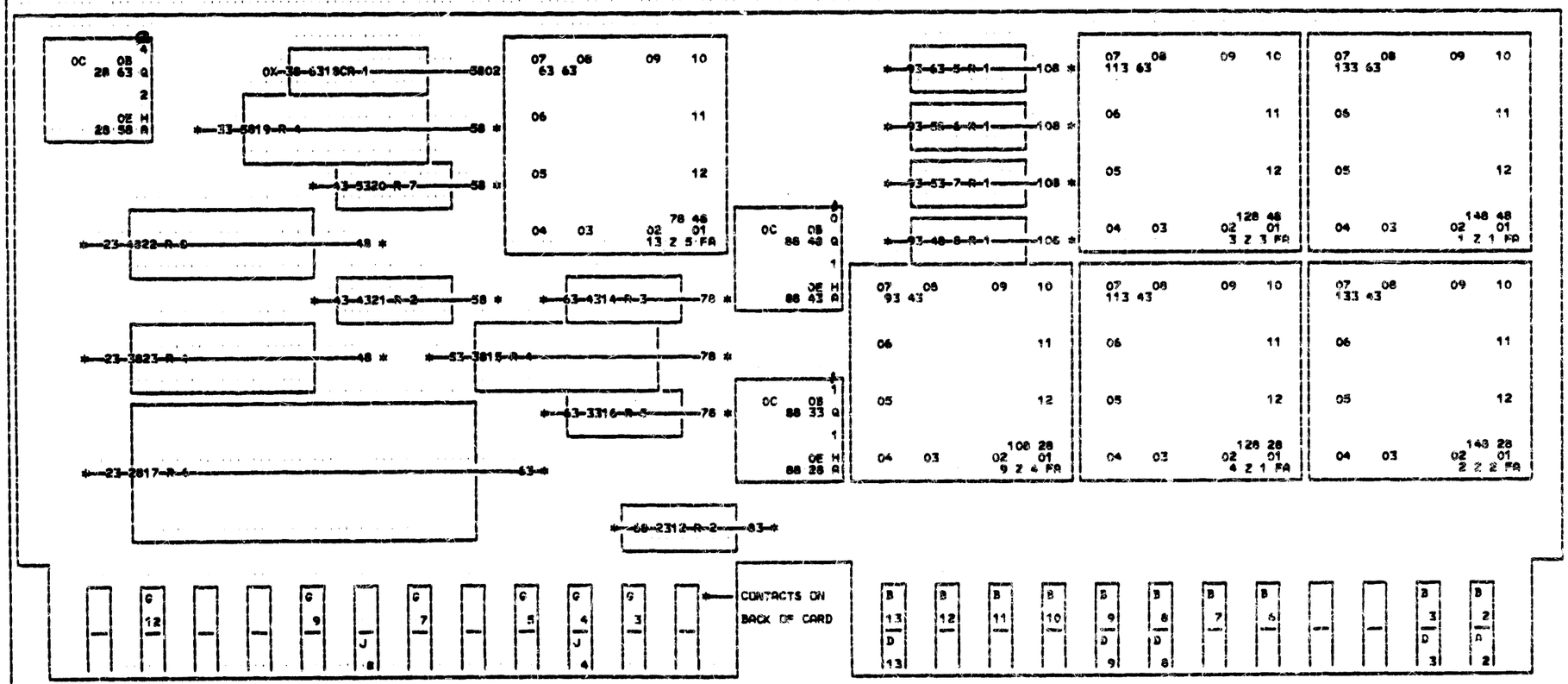

NOTES.

AA-ALL CIRCUITS MUST CONFORM TO ENG.SPEC. SHOWN ON SHEET 1.

AE-ASSEMBLE TO ENGINEERING SPECIFCATION 890913

AL-CARD HAS NOT BEEN DECOUPLED 811800 IS NOT APPLICABLE.

FA-TECH LAB EVALUATION INCOMPLETE. PART SUBJECT TO WITHDRAWAL.
ADDITIONAL USAGE TO BE AVOIDED

HA-ASSEMBLE WITH P/N 811157 (TO-18) SPACER.

INTERNATIONAL BUSINESS MACHINES CORP.

NAME	Y SELECT M + WRITE SAFETY				
DESIGN	06-18-64	RT	TYPE	2321	
DETAIL	06-18-64	RT	SCALE	NONE	
CHECK	06-22-64	FC	DRAW	7090	09-04-64
APPRO	06-22-64	SMS	SHEET 2 OF 3		

5801216