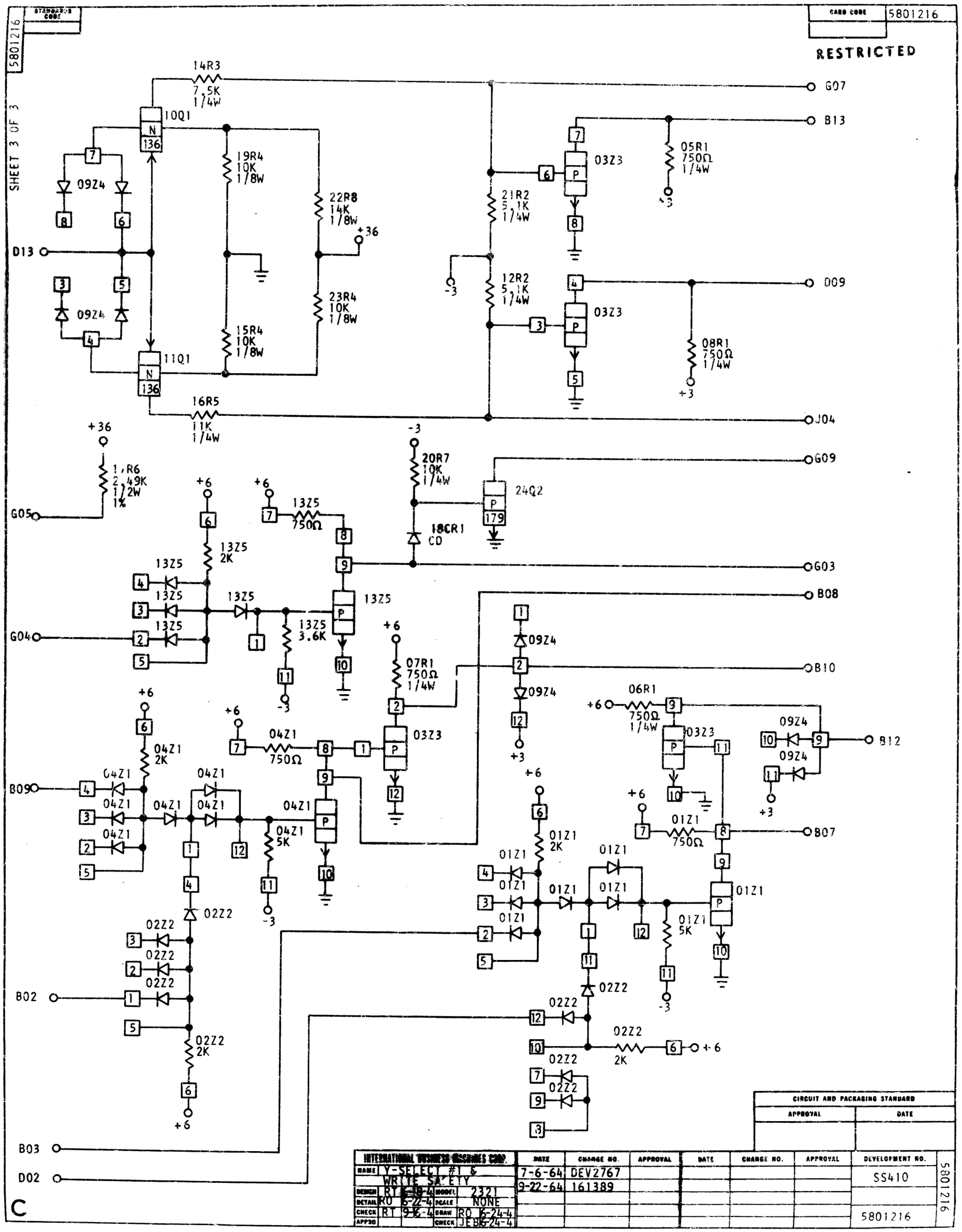
5801216
STANDARDS CODE
CARD CODE 5801216
RESTRICTED
SHEET 3 OF 3
14R3 7.5K 1/4W
10Q1
11Q1
19R4 10K 1/8W
15R4 10K 1/8W
22R8 14K 1/8W
23R4 10K 1/8W
16R5 11K 1/4W
09Z4
21R2 5.1K 1/4W
12R2 5.1K 1/4W
03Z3
05R1 750Ω 1/4W
08R1 750Ω 1/4W
G07
B13
D09
J04
D13
+36
-3
+3
1,R6 2.49K 1/2W 1%
G05
G04
B09
B02
B03
D02
G09
G03
B08
B10
B12
B07
+6
13Z5 750Ω
13Z5 2K
13Z5 3.6K
20R7 10K 1/4W
18CR1 CD
24Q2
07R1 750Ω 1/4W
06R1 750Ω 1/4W
04Z1 750Ω
04Z1 2K
04Z1 5K
01Z1 750Ω
01Z1 2K
01Z1 5K
02Z2
02Z2 2K
CIRCUIT AND PACKAGING STANDARD
APPROVAL
DATE
INTERNATIONAL BUSINESS MACHINES CORP.
NAME Y-SELECT #1 & WRITE SAFETY
DESIGN RT 6-18-4
DETAIL RO 6-22-4
CHECK RT 9-16-4
APPRO
MODEL 2321
SCALE NONE
DRAW RO 6-24-4
CHECK JEB 6-24-4
DATE
CHANGE NO.
APPROVAL
7-6-64 DEV2767
9-22-64 161389
DEVELOPMENT NO.
SS410
5801216
C