STANDARDS CODE 2-6232

5801222

SHEET 3 OF 4

CARD CODE

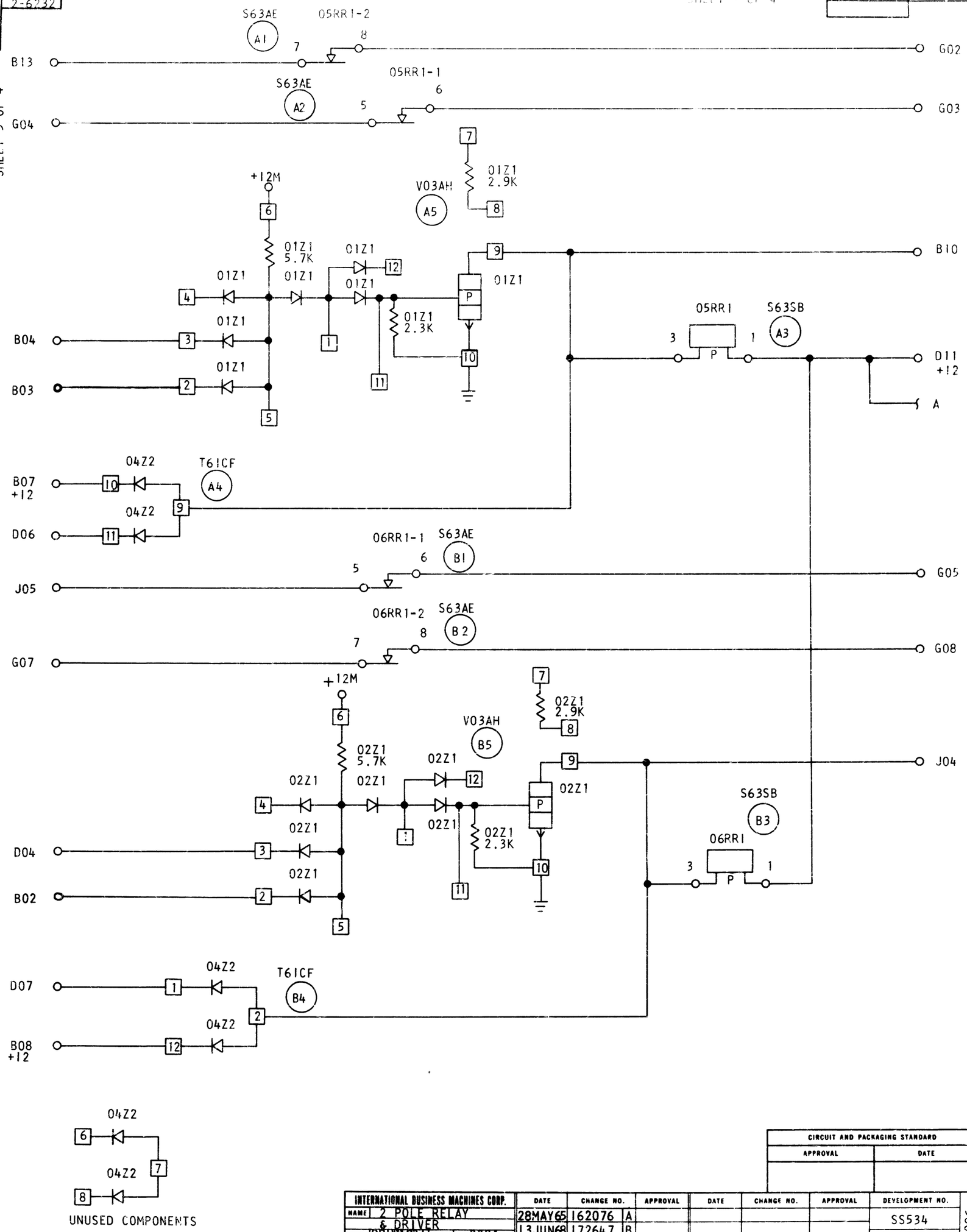

CIRCUIT AND PACKAGING STANDARD	
APPROVAL	DATE

INTERNATIONAL BUSINESS MACHINES CORP.					DATE	CHANGE NO.		APPROVAL	DATE	CHANGE NO.	APPROVAL	DEVELOPMENT NO.
NAME	2 POLE RELAY & DRIVER				28MAY65	162076	A					SS534
					13JUN68	172647	B					
DESIGN	PRH 11-23-4	MODEL	2321									
DETAIL	ED 12-1-4	SCALE	NONE									
CHECK	AMJ 5-28-5	DRAW	CDE 11-27-4									5801222
APPRO	REC 6-23-5	CHECK										

5801222

C

C. B. CO., NO. 374W 48186