STANDARDS CODE 2-6232

5801222

SHEET 4 OF 4

CARD CODE

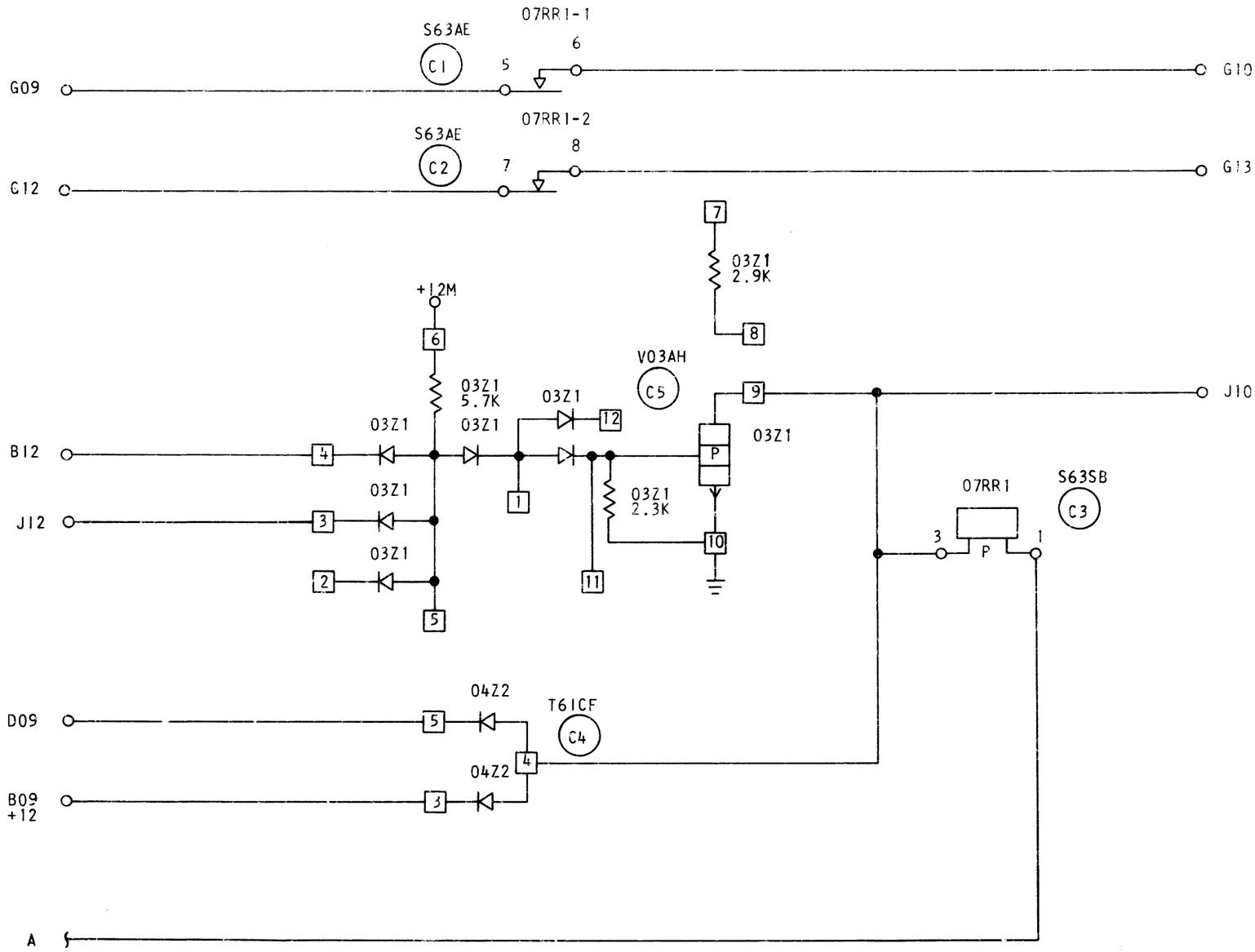

CIRCUIT AND PACKAGING STANDARD	
APPROVAL	DATE

INTERNATIONAL BUSINESS MACHINES CORP.						DATE	CHANGE NO.		APPROVAL	DATE	CHANGE NO.		APPROVAL	DEVELOPMENT NO.
NAME	2 POLE RELAY & DRIVER					28MAY65	162076	A						SS534
						13JUN68	172647	B						
DESIGN	PRH	11-23-4	MODEL	2321										
DETAIL	ED	12-F-4	SCALE	NONE										
CHECK	AMT	5-28-5	DRAW	CDB1F274										5801222
APPRO	REC	6-23-5	CHECK											

5801222

C

C. B. CO., NO. 276W 46166