5801229

SHEET 3 OF 3

SHEET 3 OF 3
RESTRICTED

CARD CODE 5801229

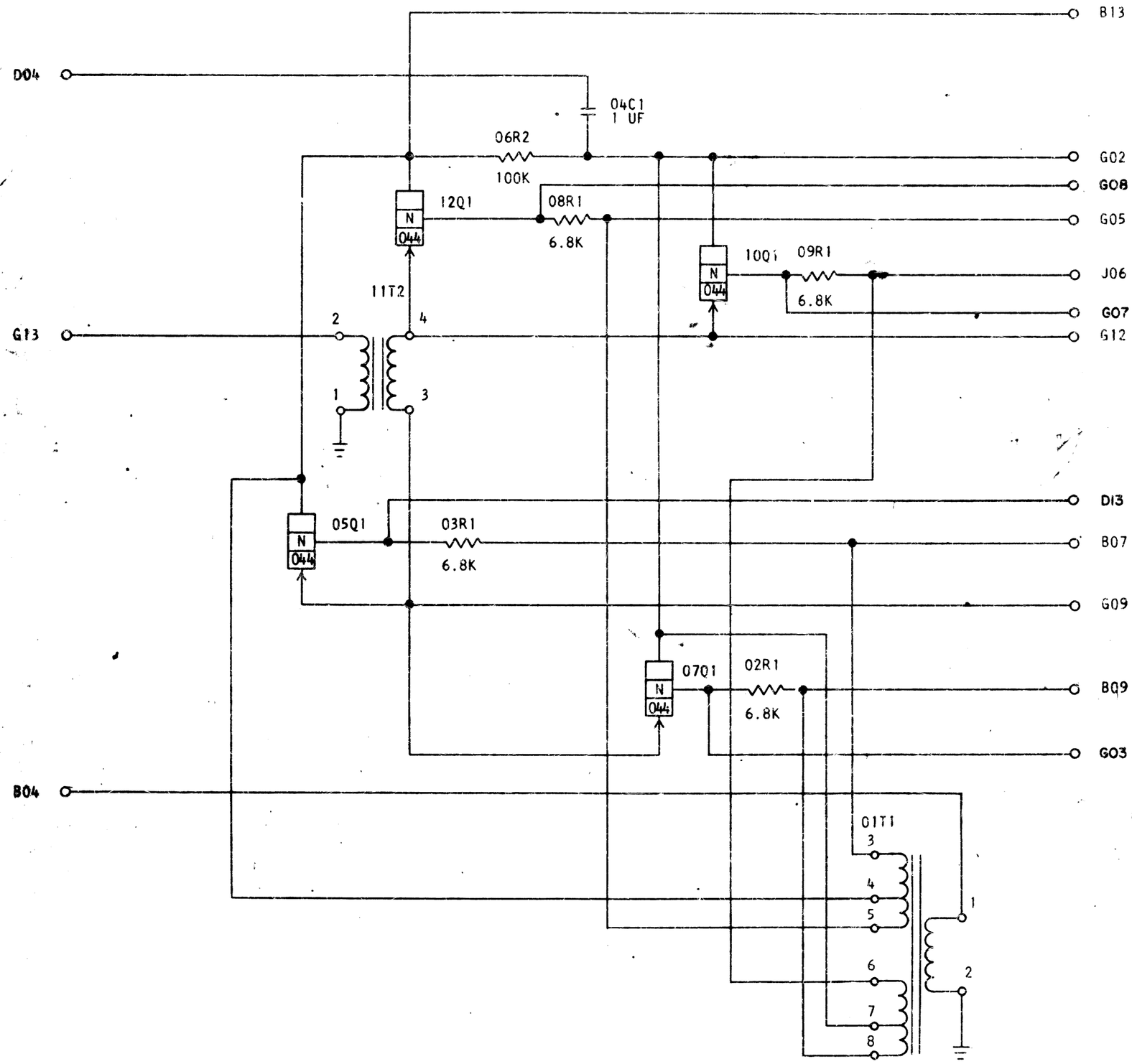

CIRCUIT AND PACKAGING STANDARD	
APPROVAL	DATE

INTERNATIONAL BUSINESS MACHINES CORP.	DATE	CHANGE NO.	APPROVAL	DATE	CHANGE NO.	APPROVAL	DEVELOPMENT NO.
NAME 400 CPS DEMOD	1-25-65	162856					SS575
DESIGN RT 11-19-4 MODEL 2321							
DETAIL ED 12-1-4 SCALE NONE							
CHECK JCB 12-1-4 DRAW CDE 11-27-4							5801229
APPRO CHECK							

5801229

C