STANDARDS CODE 2-7045

5801268

CARD CODE 5801268

SHEET 3 OF 3

RESTRICTED

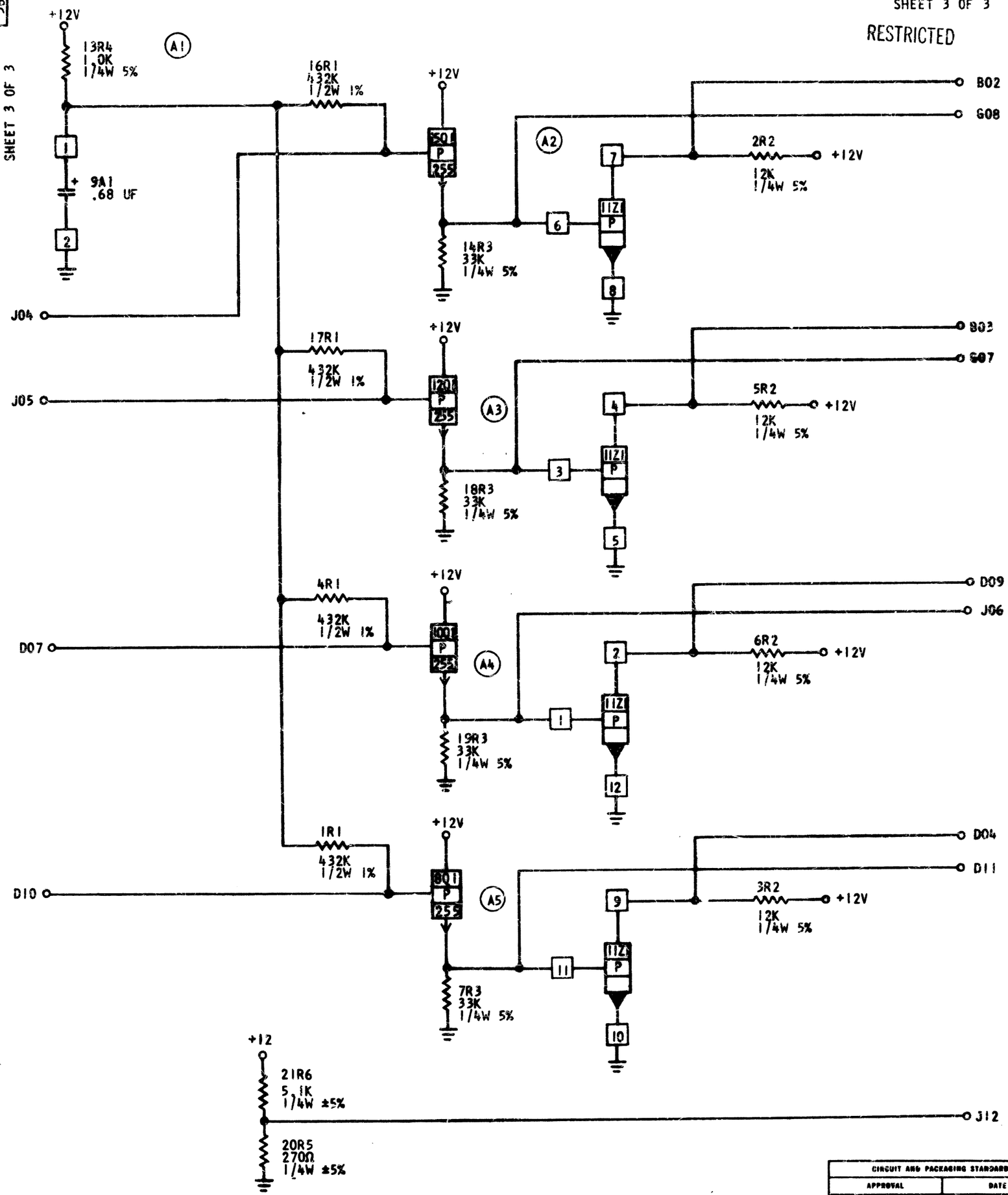

CIRCUIT ARG PACKAGING STANDARD	
APPROVAL	DATE

INTERNATIONAL BUSINESS MACHINES CORP.																							
NAME	PHOTO DOC SENSOR AMPL. AND																						
DESIGN				MODEL																			
DETAIL	WRS	11-10-65		SCALE																			
CHECK	WE	11-17-65		DRAW	WE	3-15-66																	
APPRO	RRC	4-8-5		CHECK																			

DATE	CHANGE NO.		APPROVAL	DATE	CHANGE NO.		APPROVAL	DEVELOPMENT NO.
3-17-65	163501	A						
6-23-65	164828	B						

5801268

C