THIS ALD HAS BEEN HAND CHECKED AGAINST THE WIRING Sheet 1 of 3 5801272 000 12721

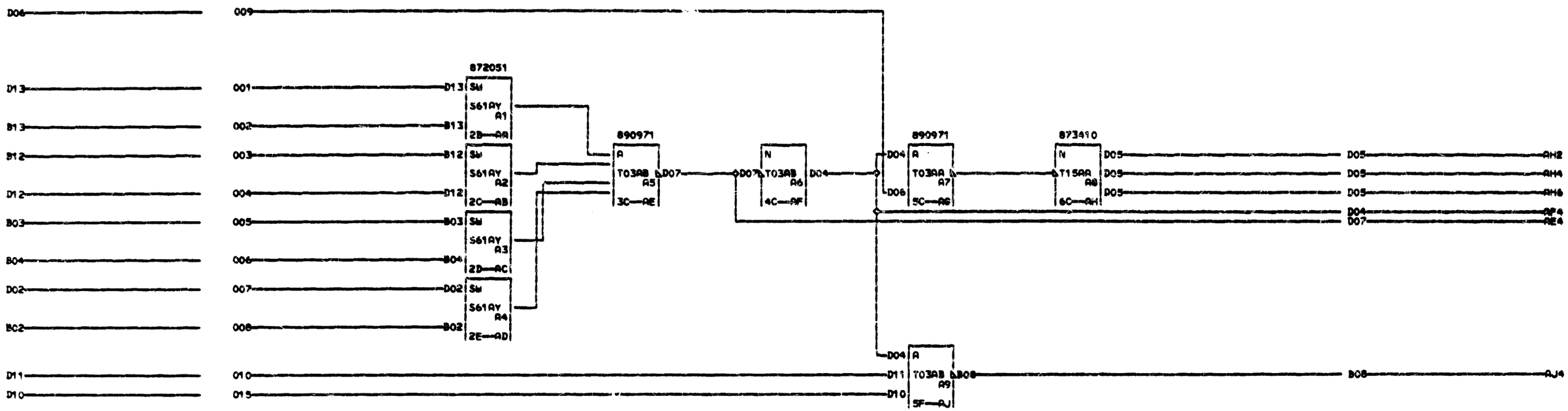

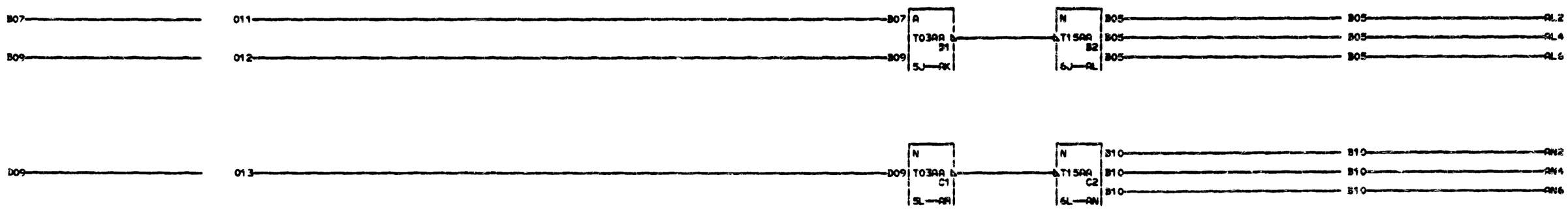

CARD SIZE01-12 PAC T03
VOLTAGE PINS
1 +6V0B11 +3V0D03
2 -3V0B06 GND0D08
7 STANDARD RESTRICTED
2 DECOUPLE +3V TO GND WITH
1 .68UF CAP P/N 2414883

000

01-15-65 162546 A
06-17-65 164034 B
11-15-65 167052 C

PLUGGABLE DECODER WITH DRIVERS	1
DATE 11-18-65 MACH. ASSEMBLY	2
LOG 321B FRAME	7
P.No. 5801272	2
	1
IBM CORP. SD BLK. AP	000