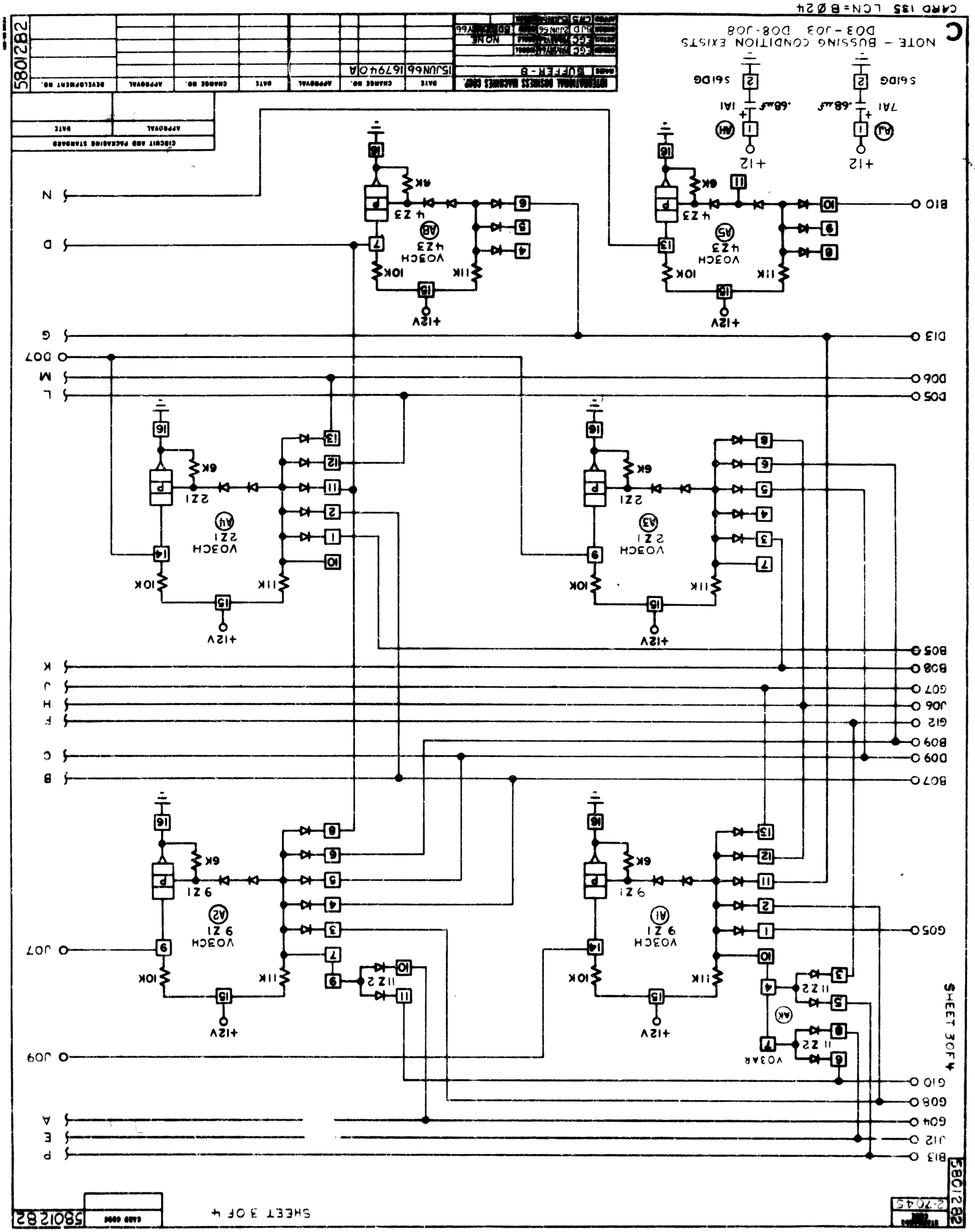
CARD 135 LCN=B024
NOTE – BUSSING CONDITION EXISTS
D03-J03 D08-J08
C
+12
A1
7A1
.68μf
1A1
S6IDG
+12V
VO3CH
4Z3
A5
A6
VO3AR
11Z2
A4
VO3CH
22I
A3
VO3CH
9ZI
A2
A1
6K
10K
11K
B13
J12
G04
G08
G10
J09
J07
G05
B07
D09
B09
G12
J06
G07
B05
B08
D05
D06
D13
B10
N
D
G
D07
M
L
K
J
H
F
C
B
E
A
P
SHEET 3 OF 4
5801282
CIRCUIT AND PACKAGING STANDARD
APPROVAL
DATE
CHANGE NO.
DEVELOPMENT NO.
15JUN66
16794OA
UPFER-B
NONE