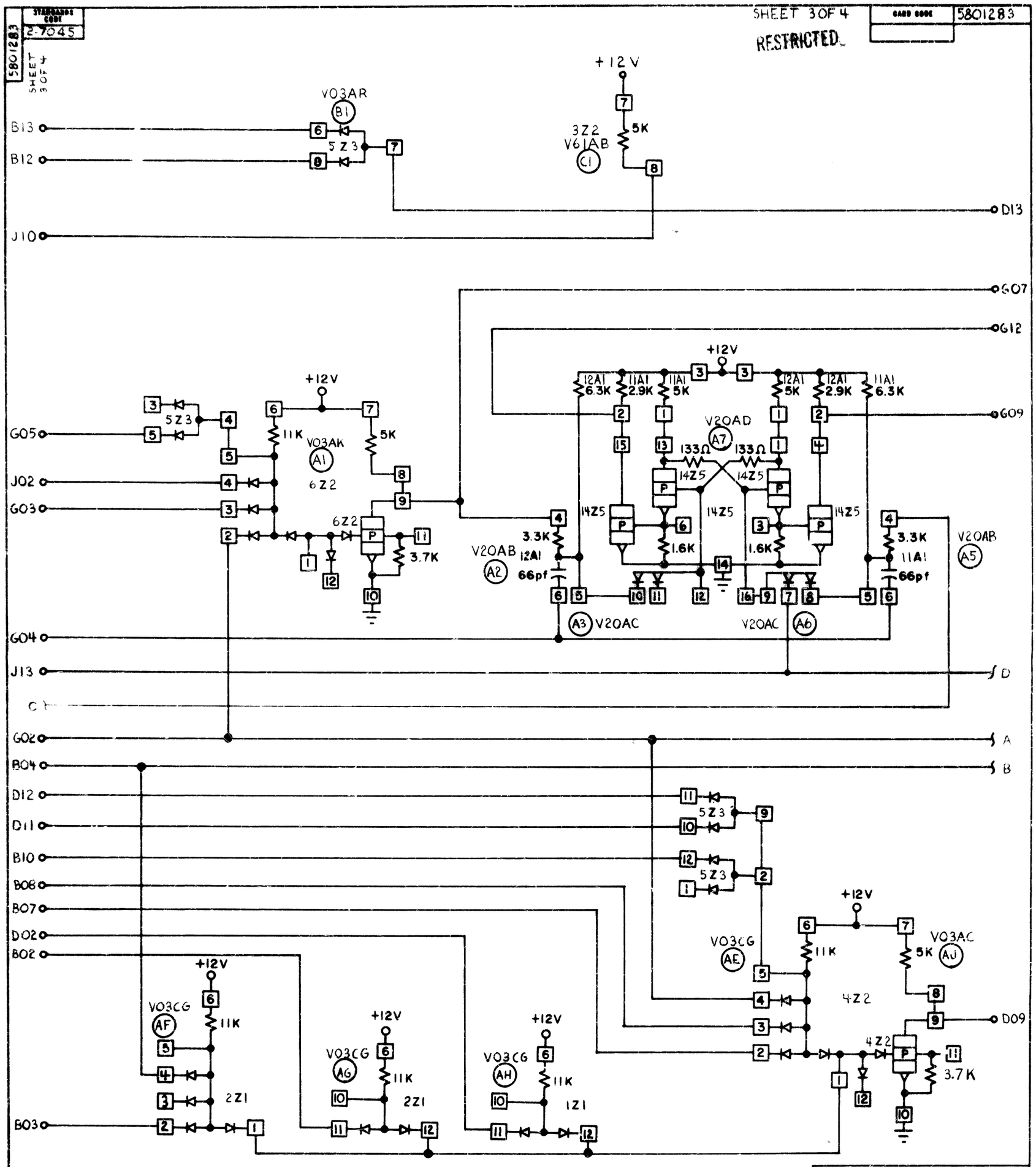

NO VOLTAGE PIN BUSSING CONDITION EXISTS

CIRCUIT AND PACKAGING STANDARD	
APPROVAL	DATE

INTERNATIONAL BUSINESS MACHINES CORP.						DATE	CHANGE NO.		APPROVAL	DATE	CHANGE NO.	APPROVAL	DEVELOPMENT NO.
NAME	BUFFER-9					15JUN 66	167941	A					
DESIGN	EGC	10MAY66	MODEL										
DETAIL	F.GC	10MAY66	SCALE	NONE									
CHECK	D.L.N	2JUN66	DRAW	RAH	25MAY66								
APPRO	C.H.S	15JUN66	CHECK										

5801283

C

CARD NO 136 LCN: B026