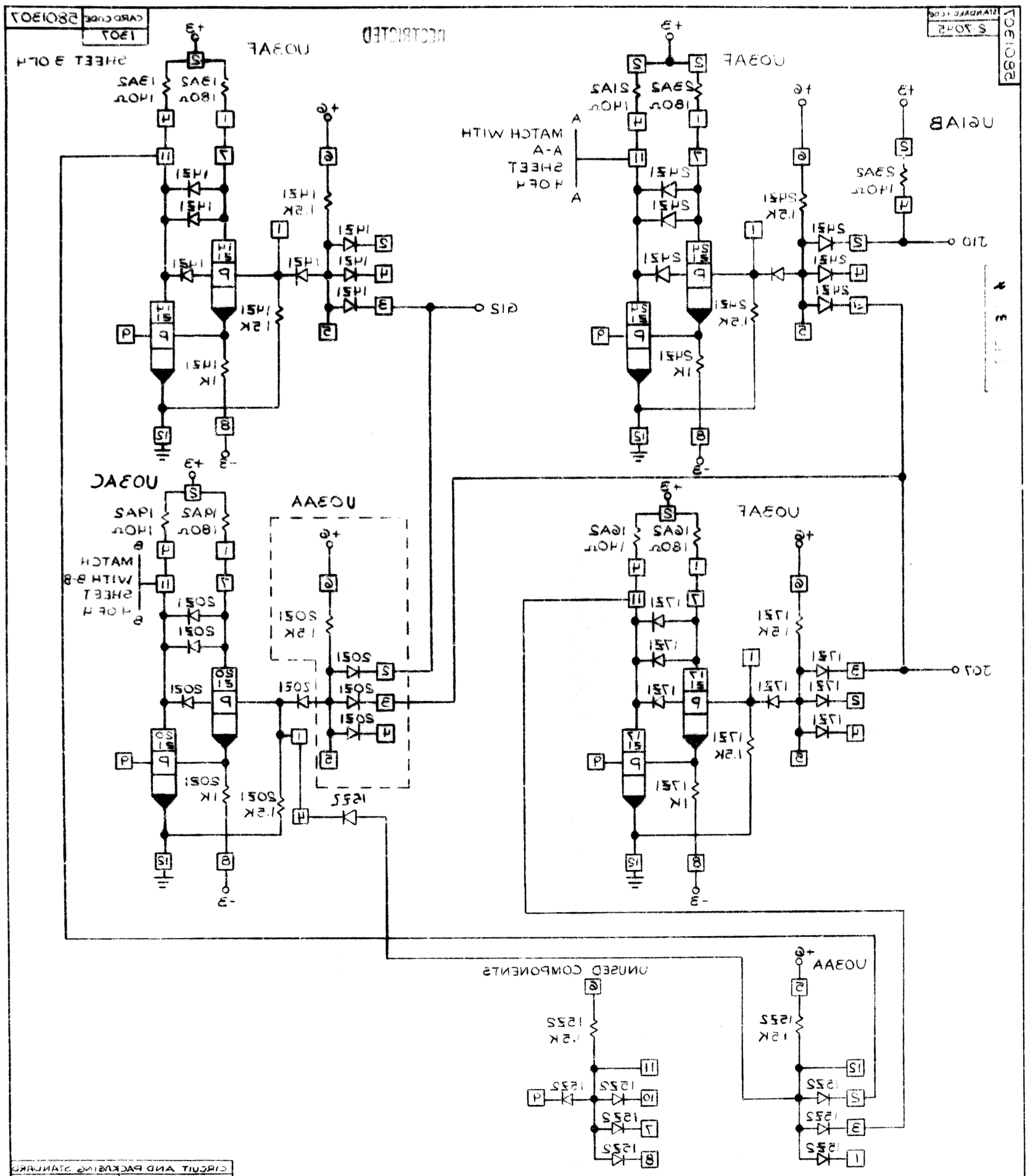

THE FOLLOWING IN ACCORDANCE:
+3 - D12, D13
-3 - D06, B06
+6 - D11, B11
GND - D08, J08

CIRCUIT AND PACKAGING STANDARD	
APPROVAL	DATE
J.E. Brown	10-19-65

INTERNATIONAL BUSINESS MACHINES CORP.							
NAME	CARD ASM DC INTENSITY ONE						
DESIGN	N.S.	10-5-65	MODEL	2560			
DETAIL	N.S.	10-5-65					
CHECK	D.S.	10-15-65	DRAW	N.S.	10-5-65		
APPRO	J.E.	10-19-65	CHECK				

DATE	CHANGE NO.	DATE	CHANGE NO.
02-26-65	16B13B=A		
7-13-65	16H66 B		
11-1-65	16S66B1 = C		

NOTE
X PRINT TO 2ND. DPEC. NO.

DEVELOPMENT NO.

580130 7