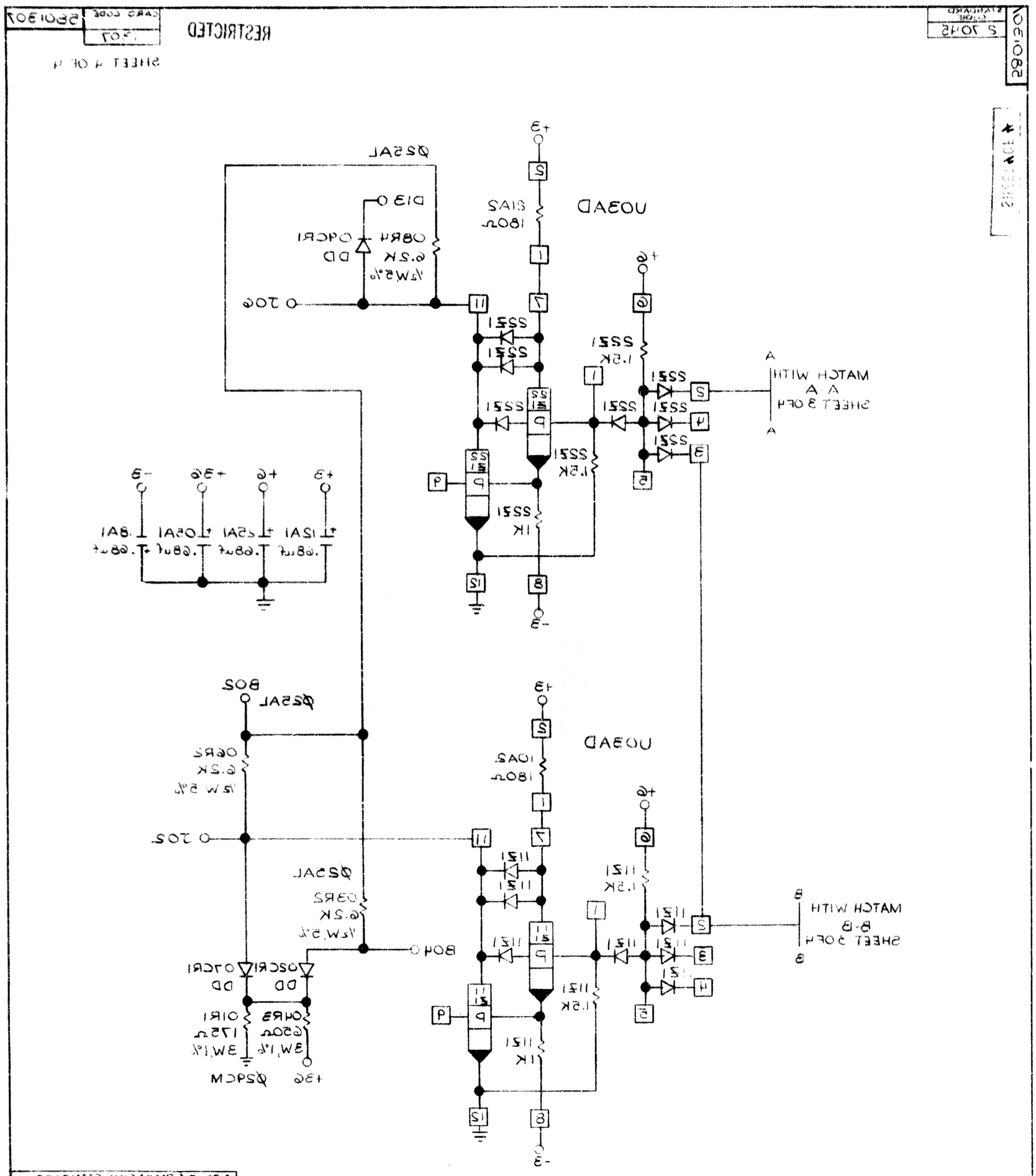
RESTRICTED
SHEET 4 OF 4
580130
U03AD
U03AD
Q25AL
Q25AL
Q25CM
MATCH WITH
A-A
SHEET 3 OF 4
MATCH WITH
B-B
SHEET 3 OF 4
+3
-3
+6
+13
+15
+35
BOS
BO4
TOS
DIS
INTERNATIONAL BUSINESS MACHINES CORP.
CARD ASM DC
INTENSITY ONE
CIRCUIT & PACKAGING STANDARD
APPROVAL
DATE
NOTE
X PRINT TO END. SPEC. NO.
DEVELOPMENT NO.
CHANGE NO.
DATE
580130J