580/308

STANDARD CODE 2.7045

RESTRICTED

RESTRICTED

CARD CODE 580/308

1308

SHEET 3 OF 3

Ø03AB, Ø03AC

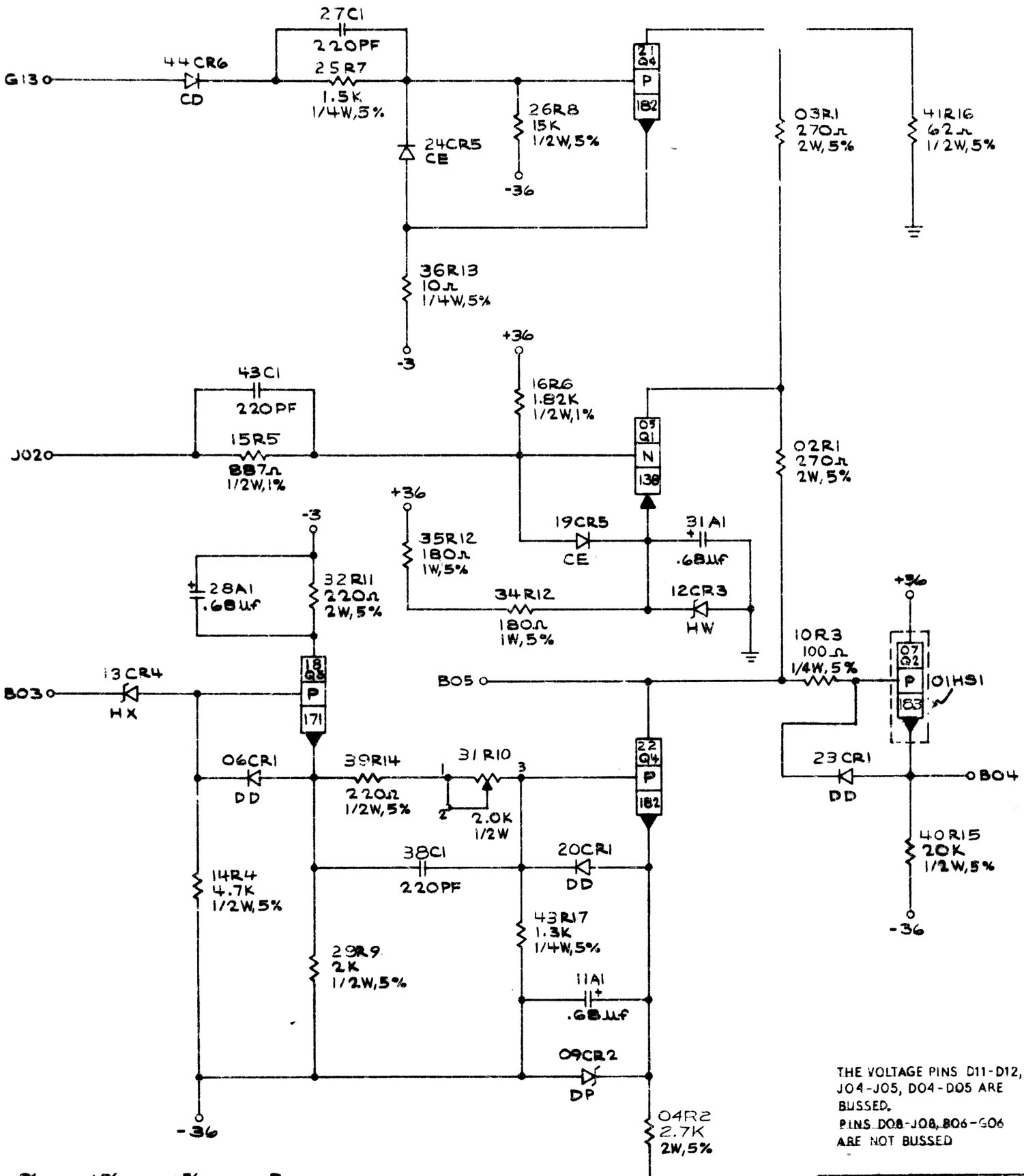

THE VOLTAGE PINS D11-D12, J04-J05, D04-D05 ARE BUSSED.
PINS D08-J08, B06-G06 ARE NOT BUSSED

CIRCUIT & PACKAGING STANDARD APPROVAL	DATE
J. R. Brenk	10-19-65

INTERNATIONAL BUSINESS MACHINES CORP.			DATE	CHANGE NO.		DATE	CHANGE NO.	
NAME			[illegible]	[illegible]	A	1 APR 66	167123	D
INIT			[illegible]	167167	B	28 JUN 66	167167	E
DESIGN		MODEL 2250	11-01-65	165679	C			
DETAIL								
CHECK	D.S. 10-[illegible]-65	DRAW						
APPRO.	J.R.B. 10-19-65	CHECK						

NOTE
X POINT TO ENG. SPEC. NO.

DEVELOPMENT NO.

580/308