STANDARDS CODE 5801349

SHEET 3 OF 3

CARD CODE 5801349

RESTRICTED

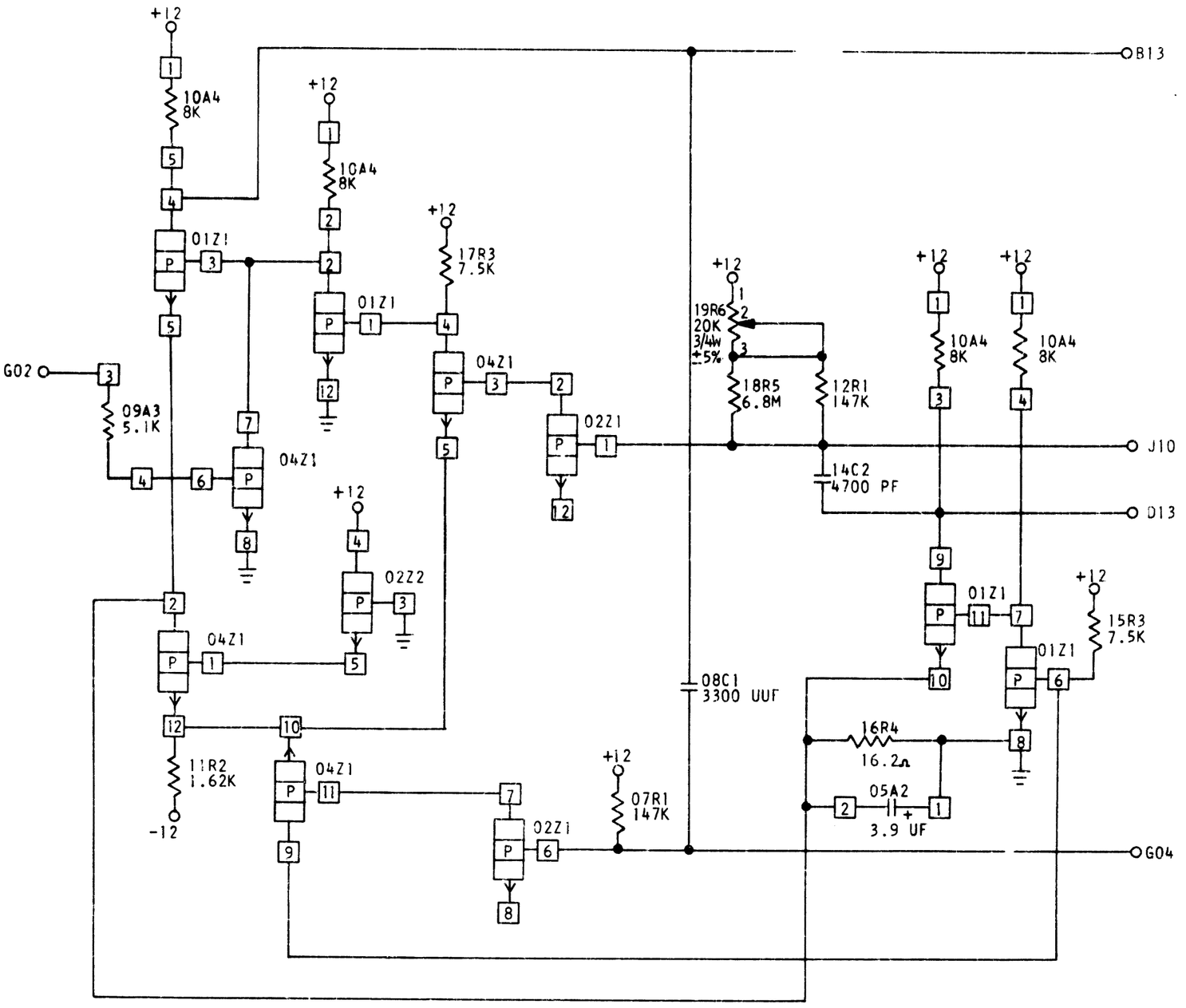

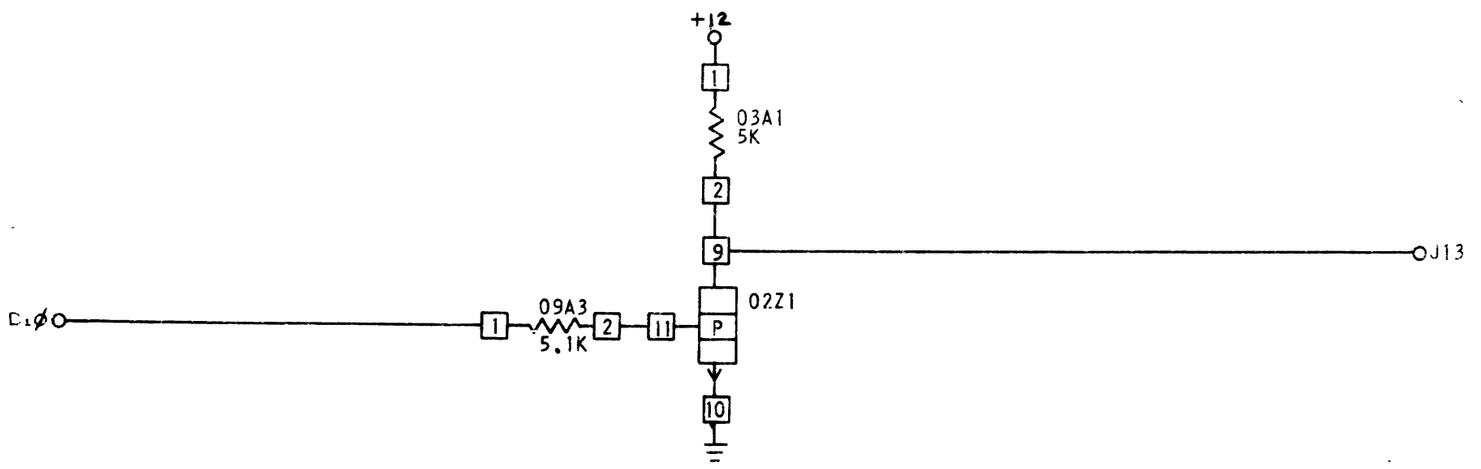

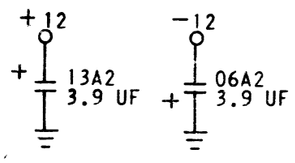

CIRCUIT AND PACKAGING STANDARD	
APPROVAL	DATE

INTERNATIONAL BUSINESS MACHINES CORP.						DATE	CHANGE NO.		APPROVAL	DATE	CHANGE NO.	APPROVAL	DEVELOPMENT NO.
NAME	5 PERCENT 1200 CPS OSCILLATOR					9-30-64	161267						SS462
DESIGN	U.K.		MODEL	1070		5-10-65	164220	B					
DETAIL	EDD	8/17/64	SCALE	NONE									
CHECK	T.H.	8/17/64	DRAW	EDD	8-17-4								5801349
APPRO			CHECK	T.H.	8/17/64								

5801349

C

C. B. CO., NO 27686 6/64

FORM 88 1001