FORM 2-7045-6 (6-63)

STANDARDS CODE	CIRCUIT AND PACKAGING STANDARD		SYM	DATE	CHANGE NO	TECH APPRO	SYM	DATE	CHANGE NO	TECH APPRO	DEVELOPMENT NO	O/M
2-7045				22AU66	168744A							
CARD CODE	APPROVAL	DATE									5801420	
1420	G.H.M	8-8-66										

SHEET 4 OF –

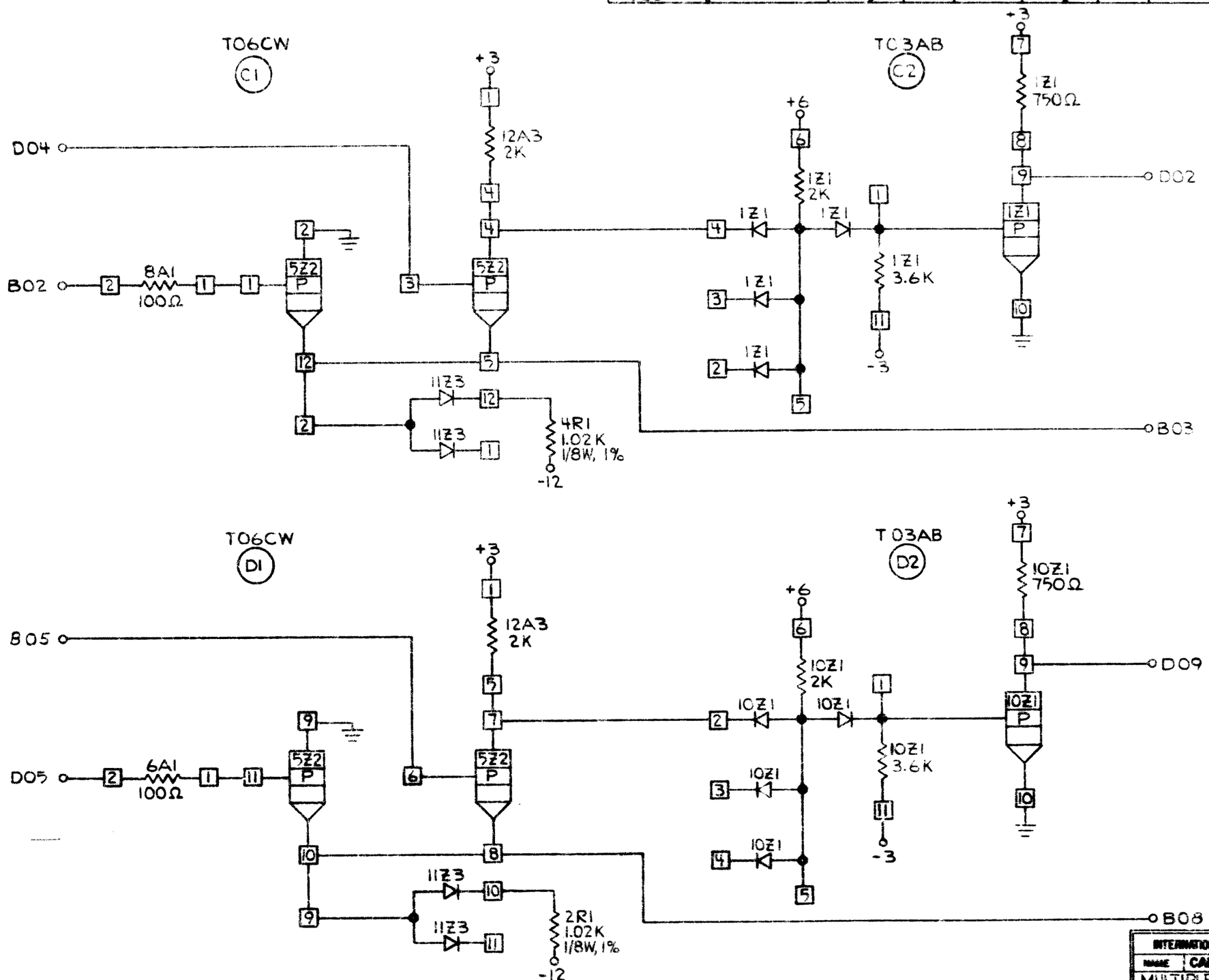

INTERNATIONAL BUSINESS MACHINES CORP				
NAME	CARD ASSY – P-LINE			
MULTIPLEX RECEIVER				
DESIGN	TWN	8AUG66	TYPE	2930
DETAIL	TWN	8AUG66	SCALE	NONE
CHECK	RCE	8AUG66	DRAW	CDA 8AUG66
APPRO	GHM	8AUG66	CHECK	

C 5801420