FORM 2-7045-6 (8-63)

STANDARDS CODE	CIRCUIT AND PACKAGING STANDARD		SYM	DATE	CHANGE NO	TECH APPRO	SYM	DATE	CHANGE NO	TECH APPRO	DEVELOPMENT NO	G/M
2-7045				20DEC66	169250A							
CARD CODE	APPROVAL	DATE									5801427	
	GHM	12 6 6									SHEET 1 OF 4	

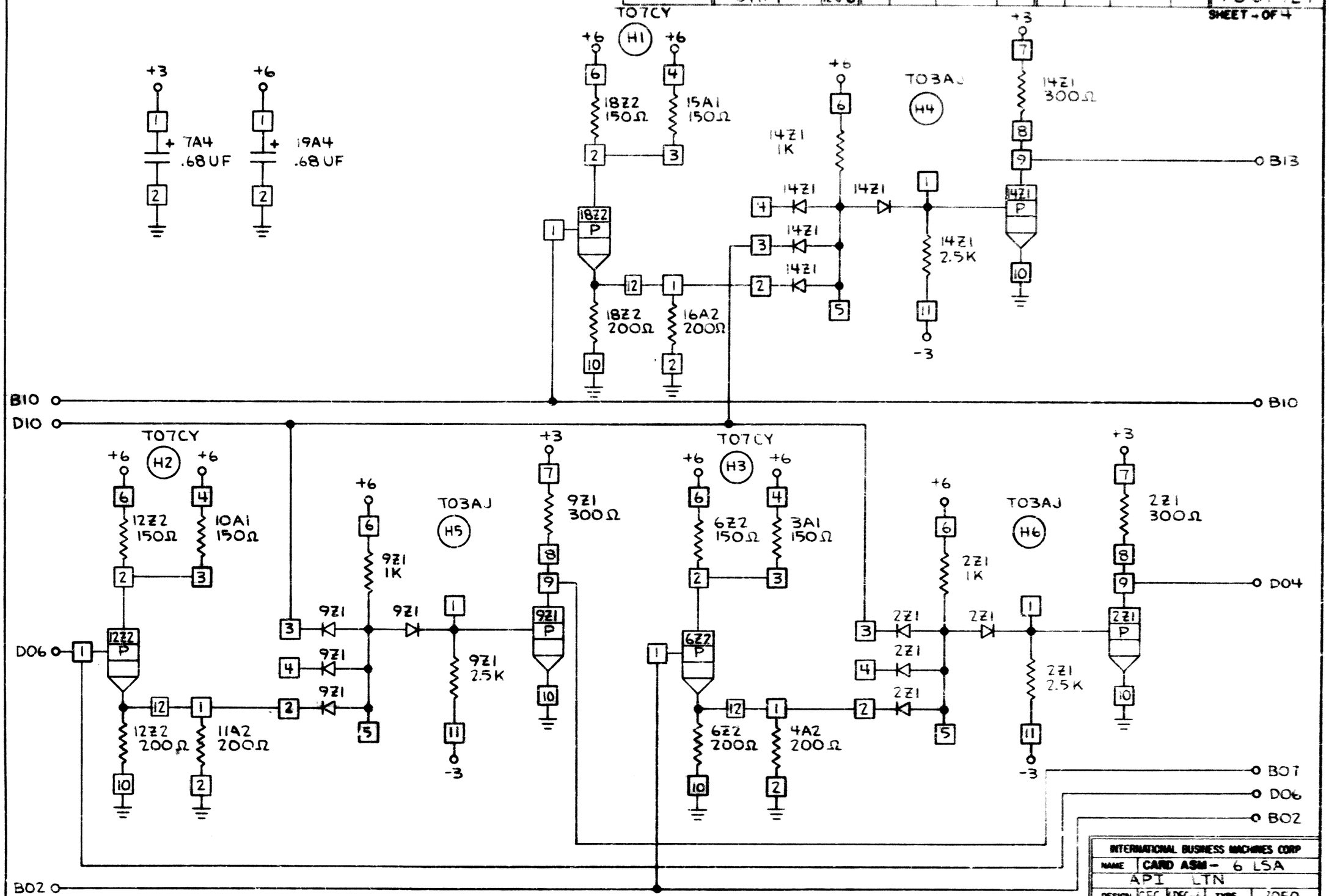

INTERNATIONAL BUSINESS MACHINES CORP				
NAME	CARD ASM - 6 LSA			
	API LTN			
DESIGN	CFC 6DEC66	TYPE	2050	
DETAIL	CFC 6DEC66	SCALE	NONE	
CHECK	RPV 9DEC66	DRAW	CDA 9DEC66	
APPRO	GHM 9DEC66	CHECK		

5801427 C