STANDARDS CODE	Z-7045			SHEET 2 OF 4	5801429
CIRCUIT APPROVAL	PHS	02-15-67		STATUS	ACTIVE
LOCATION	POUGHKEEPSIE				APPROVED
RAW CARD NUMBER	5817942			HOLE PATTERN	5817942
FRONT ARTWORK	DATE	CHANGE NO.		DATE	CHANGE NO.
5817942	02-15-67	169264	A		
BACK ARTWORK					
5817942					

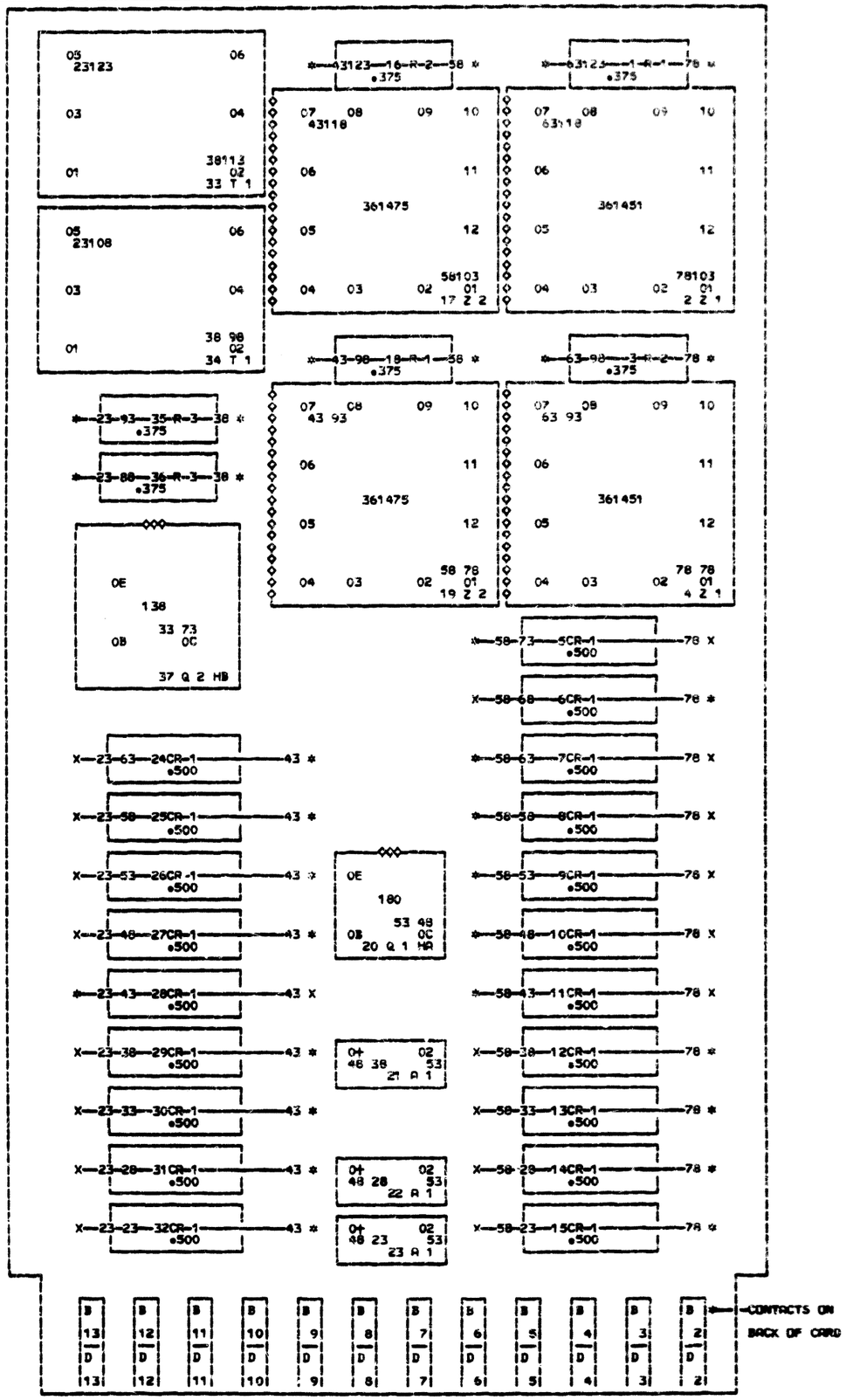

PIN	VOLTS
P 8	GRD
D 3	+ 3
D11	+ 6
B 6	- 3

CODE	PART NO	VALUE	QTY
R 1	216433	300.000 .25 + 5	2
R 2	216423	62.000 .25 + 5	2
R 3	492615	200.000 .25 + 5	2
CR 1	2414891	GY	20
Q 1	369688	180 NPN	1
Q 2	2414918	138 PNP	1
T 1	2414943	PULSE TRANSFORMER	2
Z 1	361451	SLT MODULE	2
Z 2	361475	SLT MODULE	2
A 1	2414883	RC MODULE	3
FA			22
HA	811157		01
HB	811399		01

NOTES.

AA-ALL CIRCUITS MUST CONFORM TO ENG.SPEC. A ON SHEET 1.

AB-ASSEMBLE TO ENGINEERING SPECIFICATION 1.0913

AK-CARD HAS BEEN DECOUPLED 811800 IS NOT APPLICABLE.

FA-TECH LAB EVALUATION INCOMPLETE. PART SUBJECT TO WITHDRAWAL. ADDITIONAL USAGE TO BE AVOIDED

HA-ASSEMBLE WITH P/N 811157 (TO-18) SPACER.

HB-ASSEMBLE WITH P/N 811399 (TO-5) SPACER.

INTERNATIONAL BUSINESS MACHINES CORP.

NAME	CARD ASM-WORD GATE DRIVER RESTORE				
DESIGN	02-01-67	CFC	TYPE	Z361	
DETAIL	02-01-67	CFC	SCALE	NONE	
CHECK	02-01-67	RCE	DRAW	7090	02-10-67
APPRO	02-15-67	PHS	LoCoNo	5801429	LAMINATED

5801429 169264 A