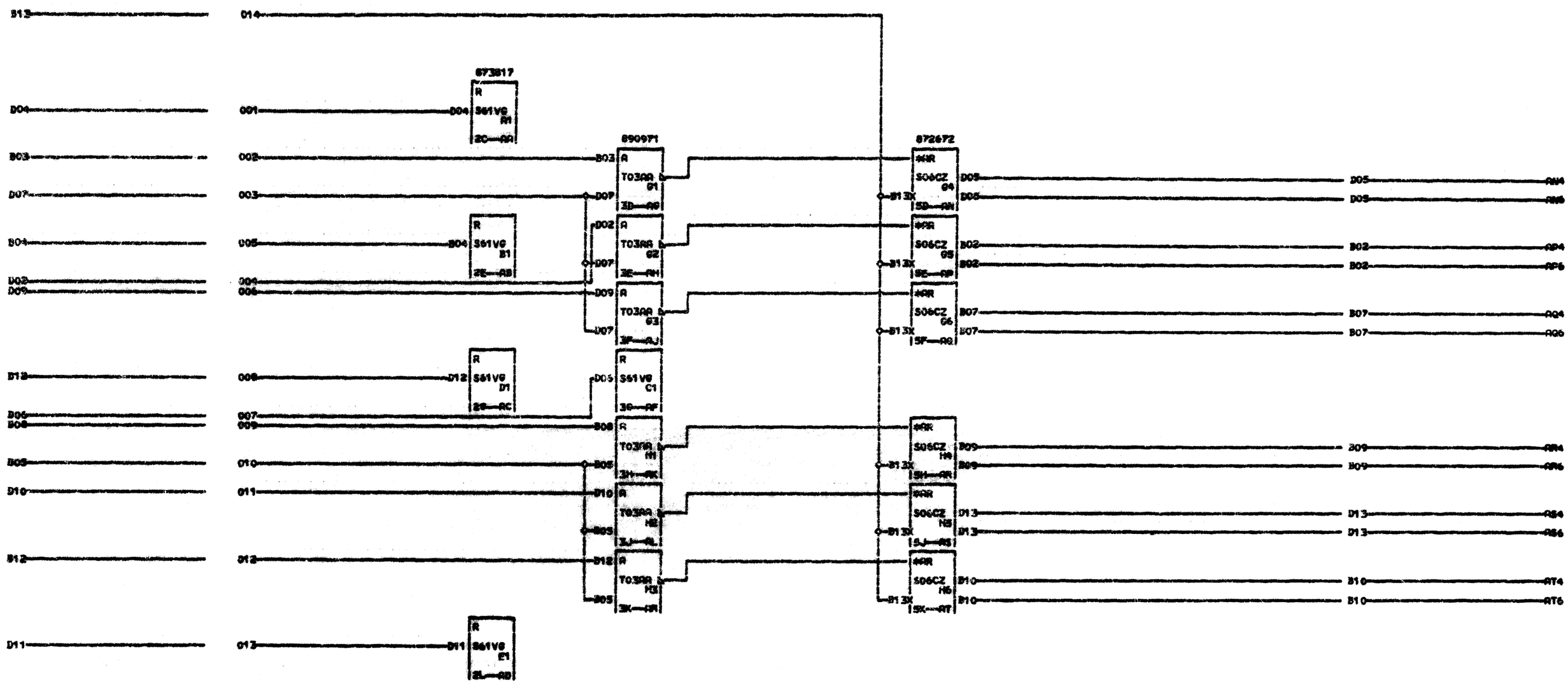

CARD SIZE: 1-42 PAC 806
VOLTAGE PINS
1 -3V
4 +6V
3 SPECIAL ACTIVE
5
1
000

04-05-67 169719 A
06-16-67 171586 B

Z 3RI-DCIS ON LORD +
5-95 GMP LORDS
DATE 06-06-67 RACH. ASSEMBLY
LOG 266 FRAME
CD PG 1 OF 1 P.N. 5601435
IBM CORP. PD BLK. RU