FORM 2-7045-6 (8-63)

STANDARDS CODE	CIRCUIT AND PACKAGING STANDARD		SYM	DATE	CHANGE NO	TECH APPRO	SYM	DATE	CHANGE NO	TECH APPRO	DEVELOPMENT NO	Q/M
2-7045				7APR67	169723	A						
CARD CODE	APPROVAL	DATE		16JUN67	171588	B						
1438	P.H.S.	7APR67		13SEP67	172186	C					5801438	

SHEET 3 OF 4

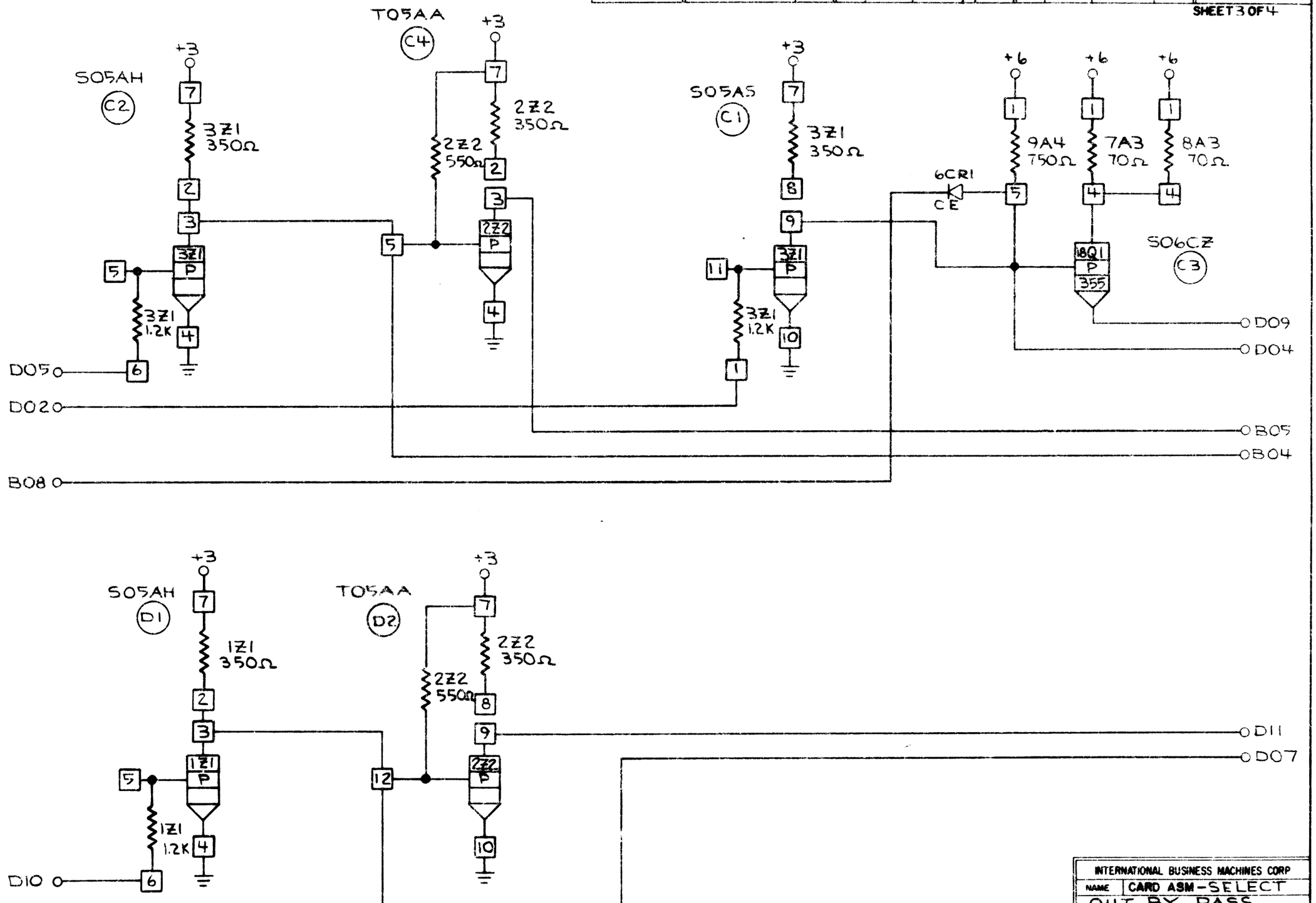

INTERNATIONAL BUSINESS MACHINES CORP				
NAME	CARD ASM-SELECT OUT BY PASS			
DESIGN	WM	7APR67	TYPE	
DETAIL	WM	7APR67	SCALE	NONE
CHECK	MA	16APR67	DRAW	
APPRO	PHS	7APR67	CHECK	

5801438 C