FORM 2-7045-6 (8-63)

STANDARDS CODE	CIRCUIT AND PACKAGING STANDARD		SYM	DATE	CHANGE NO.	TECH APPRO	SYM	DATE	CHANGE NO.	TECH APPRO	DEVELOPMENT NO	Q/M
2-7045				31MAR67	169725A							
CARD CODE	APPROVAL	DATE		16JUN67	171592B							
1440	PHS	31MAR67									58014-J	

SHEET 5 OF 5

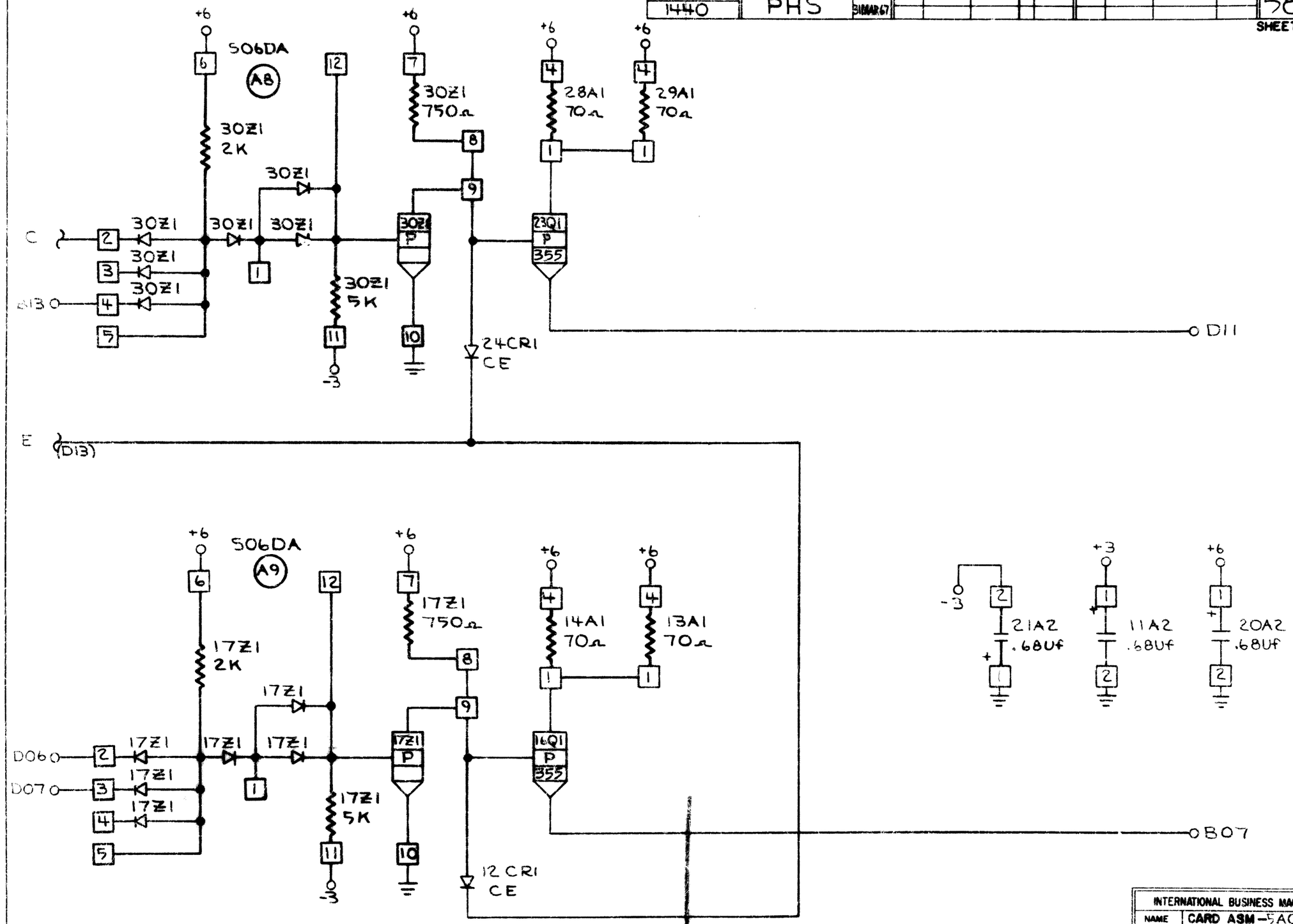

INTERNATIONAL BUSINESS MACHINES CORP				
NAME	CARD ASM-5A01 MPX DR WITH 4 AI INPUTS			
DESIGN	MHA	13MAR67	TYPE	2044
DETAIL	MHA	13MAR67	SCALE	NONE
CHECK	WM	14MAR67	DRAW	CDA 22MAR
APPRO	PHS	31MAR67	CHECK	CDA 23MAR

0771085 C