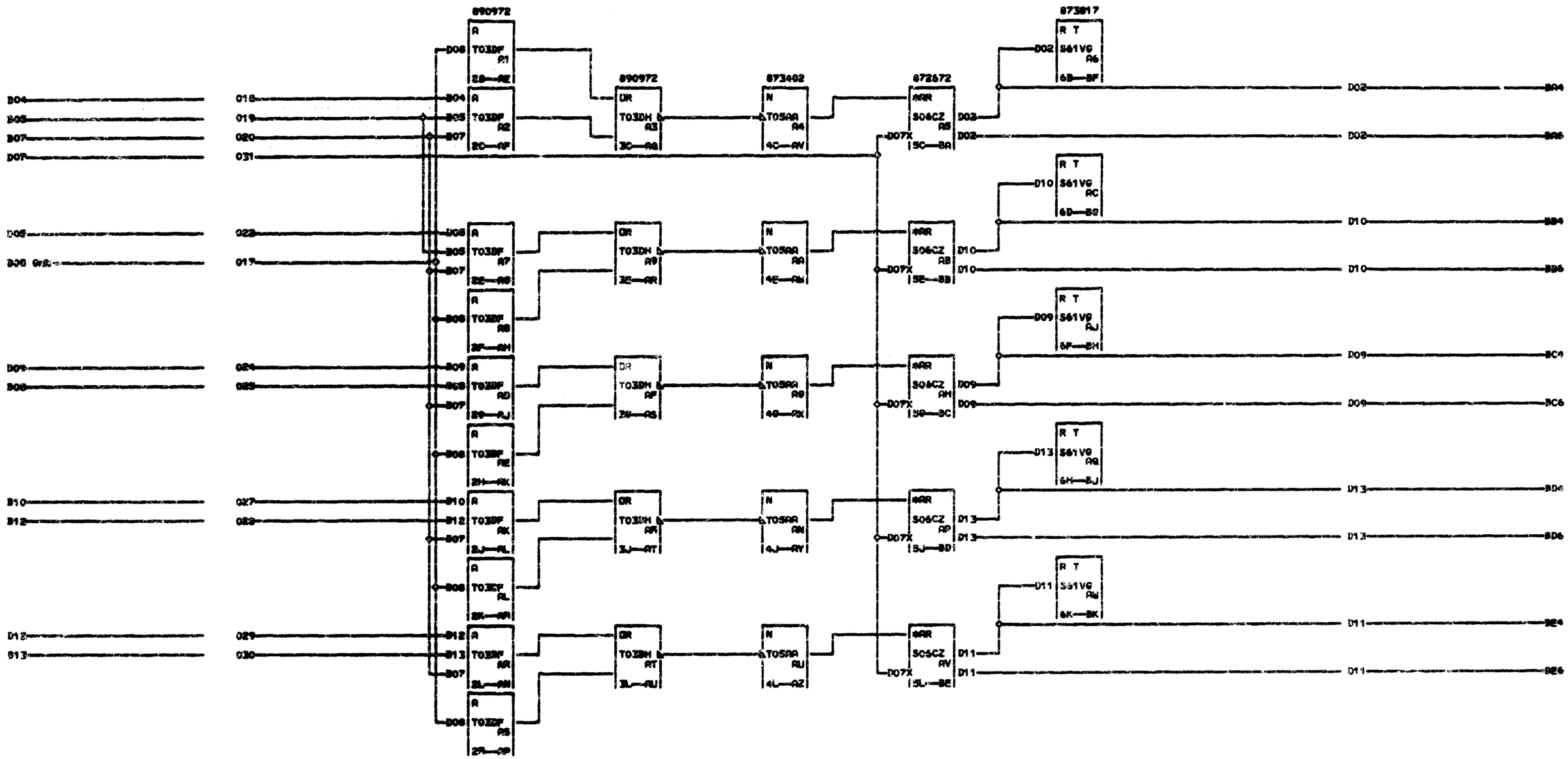


CARD SIZE9 1-12 PAC 506
VOLTAGE PINS
1 +5V0511 +3V0003
4 -3V0006 GND0008
4 CONTROLLED
9 NOTE 1 PINS 3002B0020B0404B06
1 NONE RESERVED FOR SPECIAL USE
NOND PLUGS NOT BE CONNECTED
CODE=INTERNAL ON CARD

06-14-67 169791 A
06-16-67 171994 B

| | |
|---|---|
| 5 RPLX DRIVERS | |
| DATE 06-06-67 MACH. ASSEMBLY | 14491 |
| LOG 267 FRAME | |
| CD PG 1 OF 1 P.N. 5901449 | 000 |
| IBM CORP. PD BLK. BL | |