FORM 2-7045-6 (8-63)

STANDARDS CODE	CIRCUIT AND PACKAGING STANDARD		SYM	DATE	CHANGE NO	TECH APPRO	SYM	DATE	CHANGE NO	TECH APPRO	DEVELOPMENT NO
2-6235				3 MAY 67	169747	A					
CARD CODE	APPROVAL	DATE		16 JUN 67	171595	B					
1451	PEM	18APR67		14 NOV 67	173042	C					580 -
				5 JAN 68	173043	D					

SHEET 4 OF

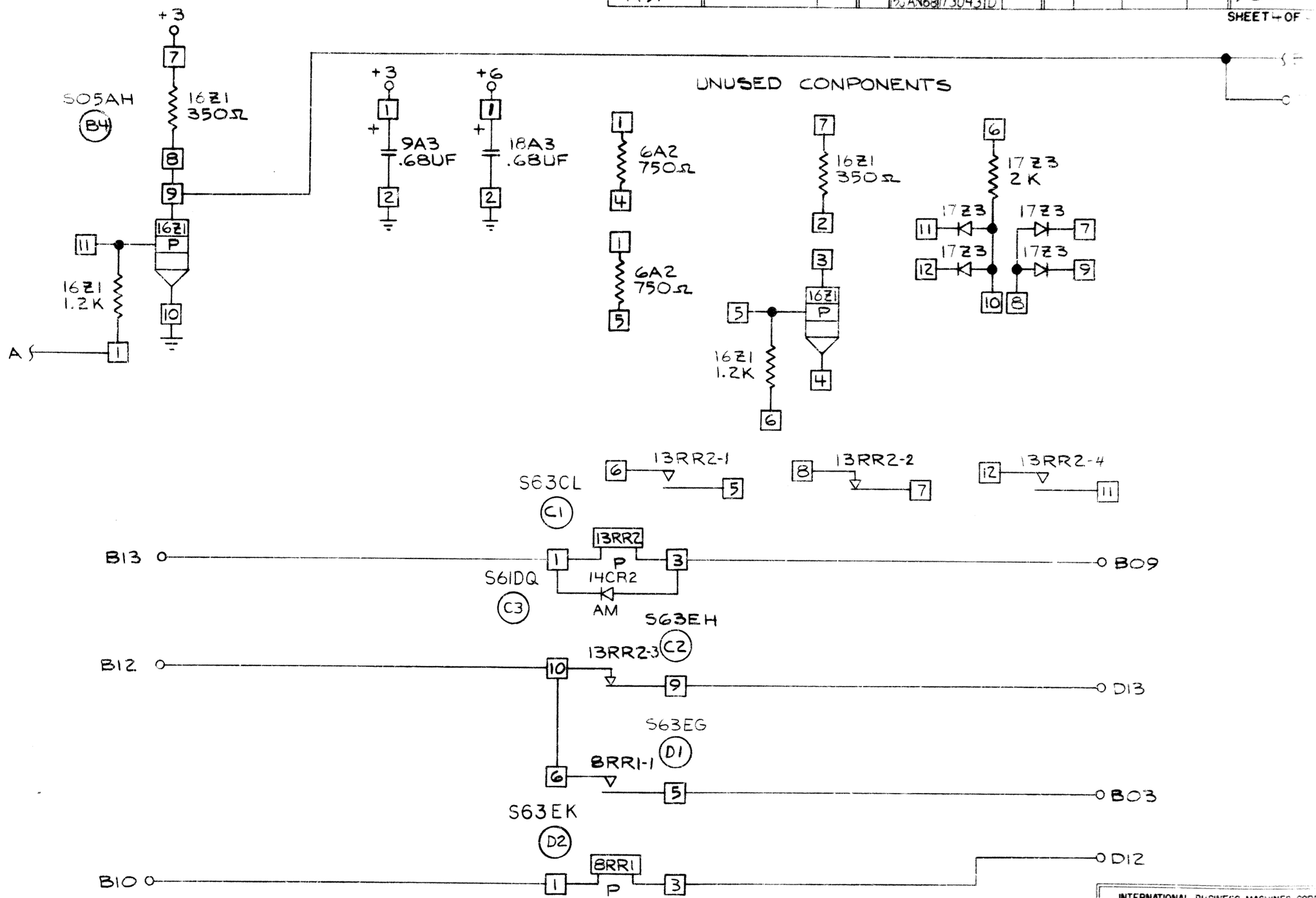

INTERNATIONAL BUSINESS MACHINES CORP				
NAME	CARD ASM - SELECT OUT BY PASS - 6			
DESIGN	MHA	6APR67	TYPE	
DETAIL	MHA	6APR67	SCALE	NONE
CHECK	WM	18APR67	DRAW	[illegible]
APPRO	PHS	18APR67	CHECK	[illegible]

15th1085 C