STANDARD CODE	CIRCUIT AND PACKAGING STANDARD		SYM	DATE	CHANGE NO		SYM	DATE	CHANGE NO		DEVELOPMENT NO	S/M
2-7048				3 Nov 65	M55944A							
CARD CODE	APPROVAL	DATE									5801501	
1501	GHM	10-4-65										

SHEET 3 OF 3

RESTRICTED

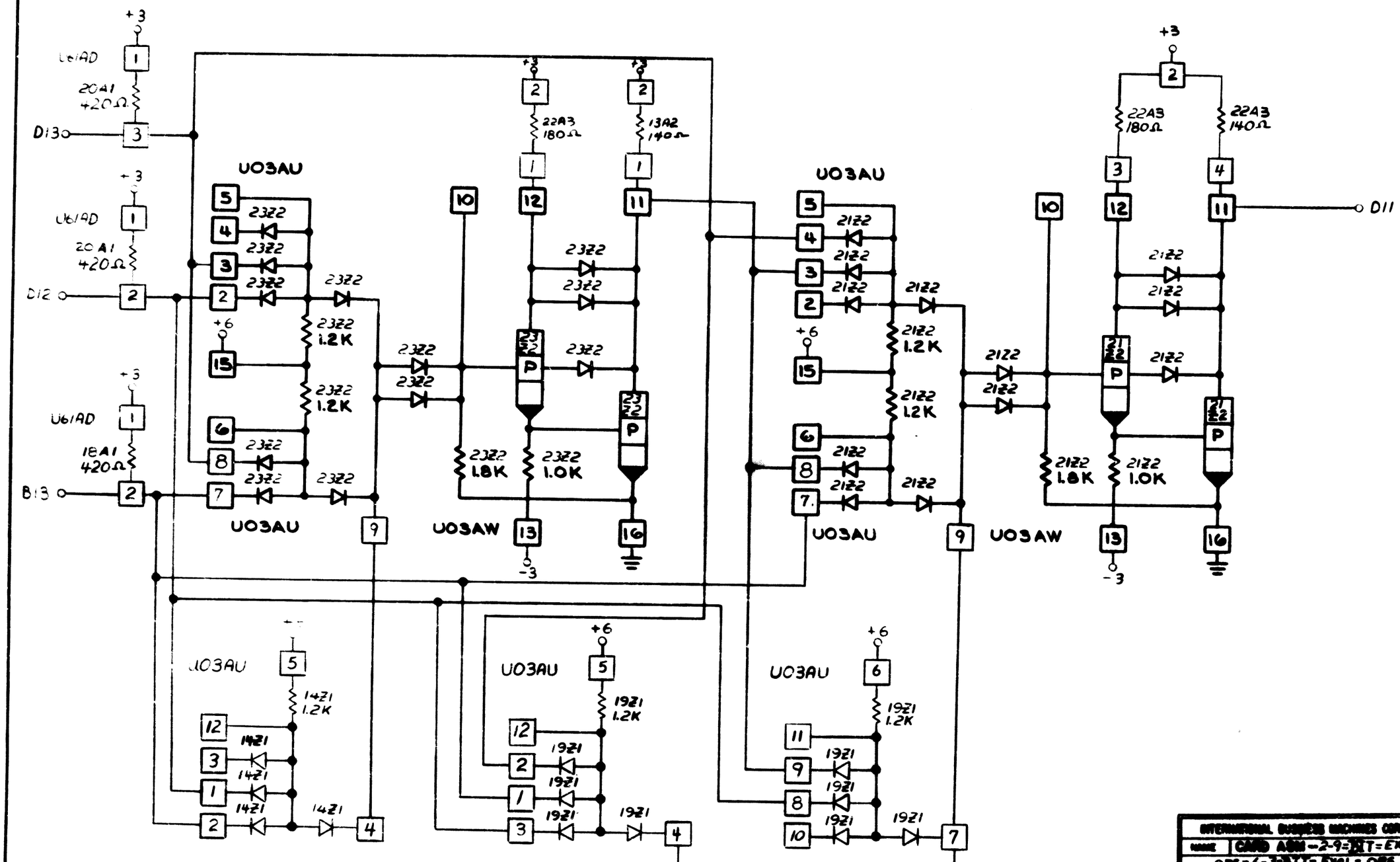

INTERNATIONAL BUSINESS MACHINES CORP				
NAME	CARD ADM-2-9=BIT=EXCL			
ORG=6-3=BIT=EXCL=ORG				
DESIGN	ADC	10-4-65	TYPE	DM
DETAIL	ADC	10-4-65	SCALE	NONE
CHECK	ADC	10-12-65	GRID	
APPRO	GHM	10-7-65	CHECK	

5801501 C