FORM 2 7045-6 (8-63)

STANDARDS CODE	CIRCUIT AND PACKAGING STANDARD		SYM	DATE	CHANGE NO	TECH APPRO	SYM	DATE	CHANGE NO	TECH APPRO	DEVELOPMENT NO	Q/M
2-7045				4-10-67	69742A							
CARD CODE	APPROVAL	DATE		4MAR69	177227B							
1509	PHS	2-1-67									5801509	

SHEET 4 OF 10

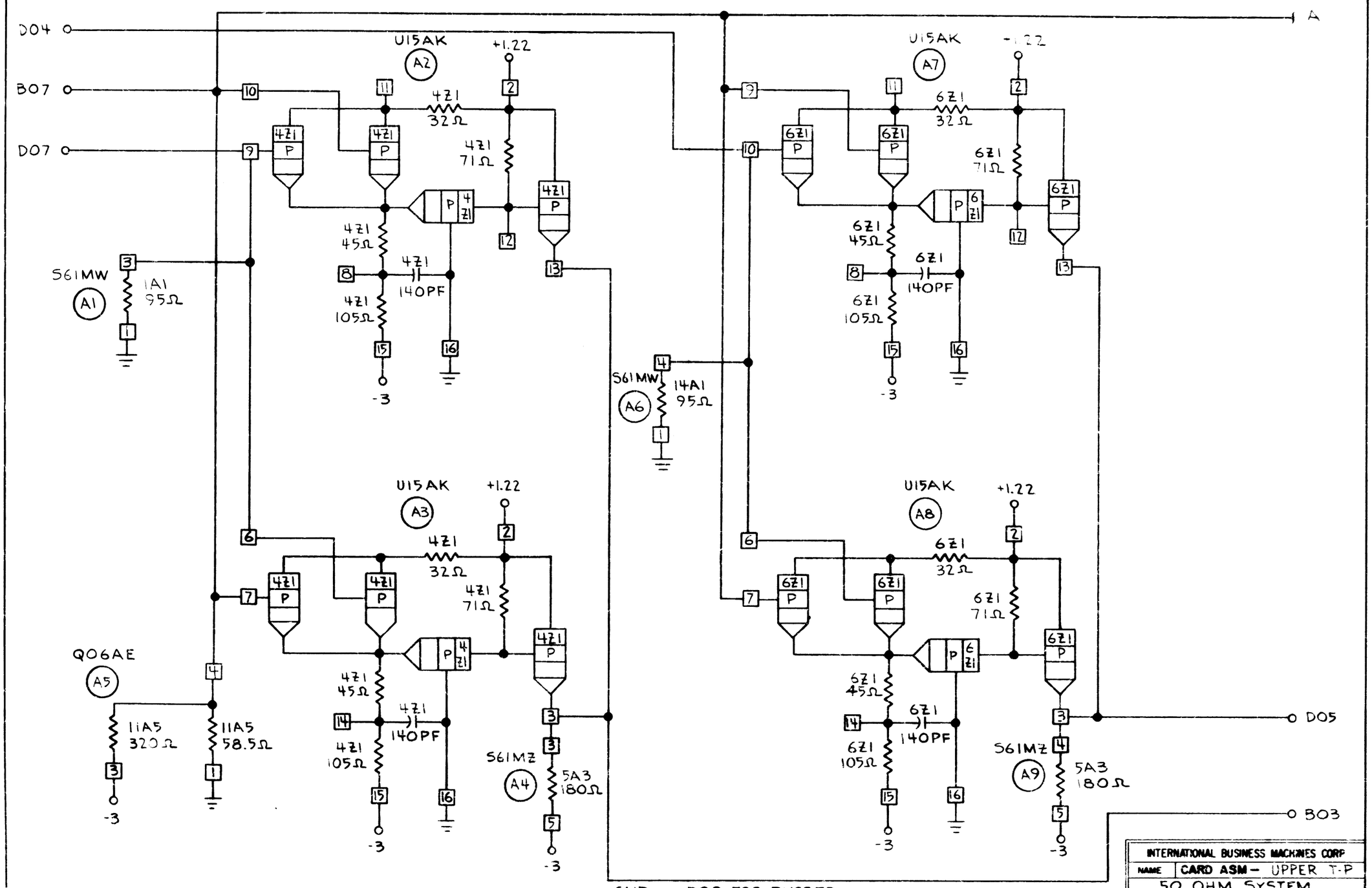

GND --- D08, J08 BUSSED
+1.22 --- J03, D03 NOT BUSSED
-3 --- B06, G06 NOT BUSSED

INTERNATIONAL BUSINESS MACHINES CORP				
NAME	CARD ASM – UPPER T-P			
50 OHM SYSTEM				
DESIGN	REF	OCT66	TYPE	C-50
DETAIL	RPV	1FEB67	SCALE	NONE
CHECK	CFC	2FEB67	DRAW	CDA 22FEB67
APPRO	PHS	1FEB67	CHECK	

6051085 C