FORM 2-7045-6 (6-67)

STANDARDS CODE	CIRCUIT AND PACKAGING STANDARD		SYM	DATE	CHANGE NO	TECH APPRO	SYM	DATE	CHANGE NO	TECH APPRO	DEVELOPMENT NO
2-7045				4-11-67	169743 A						
CARD CODE	APPROVAL	DATE		6JUN68	174535 B						58015
1510	PHS	1-30-67									

SHEET 7 OF

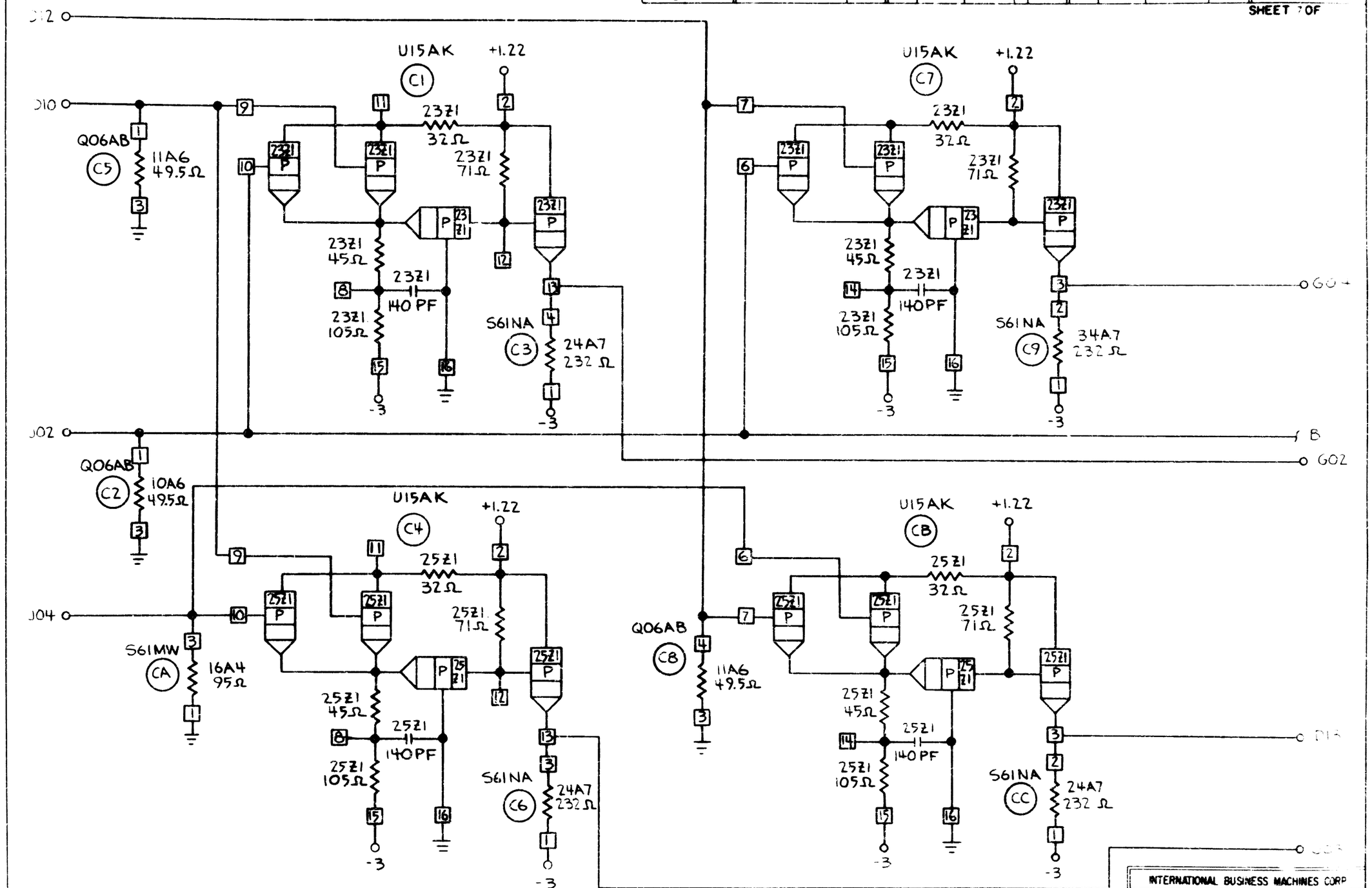

INTERNATIONAL BUSINESS MACHINES CORP				
NAME	CARD ASM – LOWER			
50 OHM SYSTEM				
DESIGN	NPB	28SEP66	TYPE	
DETAIL	CFC	26JAN67	SCALE	NONE
CHECK	RPV	7FEB67	DRAW	CDA
APPRO	PHS	2FEB67	CHECK	

58015 C