FORM 7045-6 (8-63)

STANDARDS CODE	CIRCUIT AND PACKAGING STANDARD		SYM	DATE	CHANGE NO	TECH APPRO	SYM	DATE	CHANGE NO	TECH APPRO	DEVELOPMENT NO	Q/M
2-7045				4-11-67	169743 A							
CARD CODE	APPROVAL	DATE		6 JUN 68	174535 B							
1510	PHS	1-30-67									58015	

SHEET 9 OF

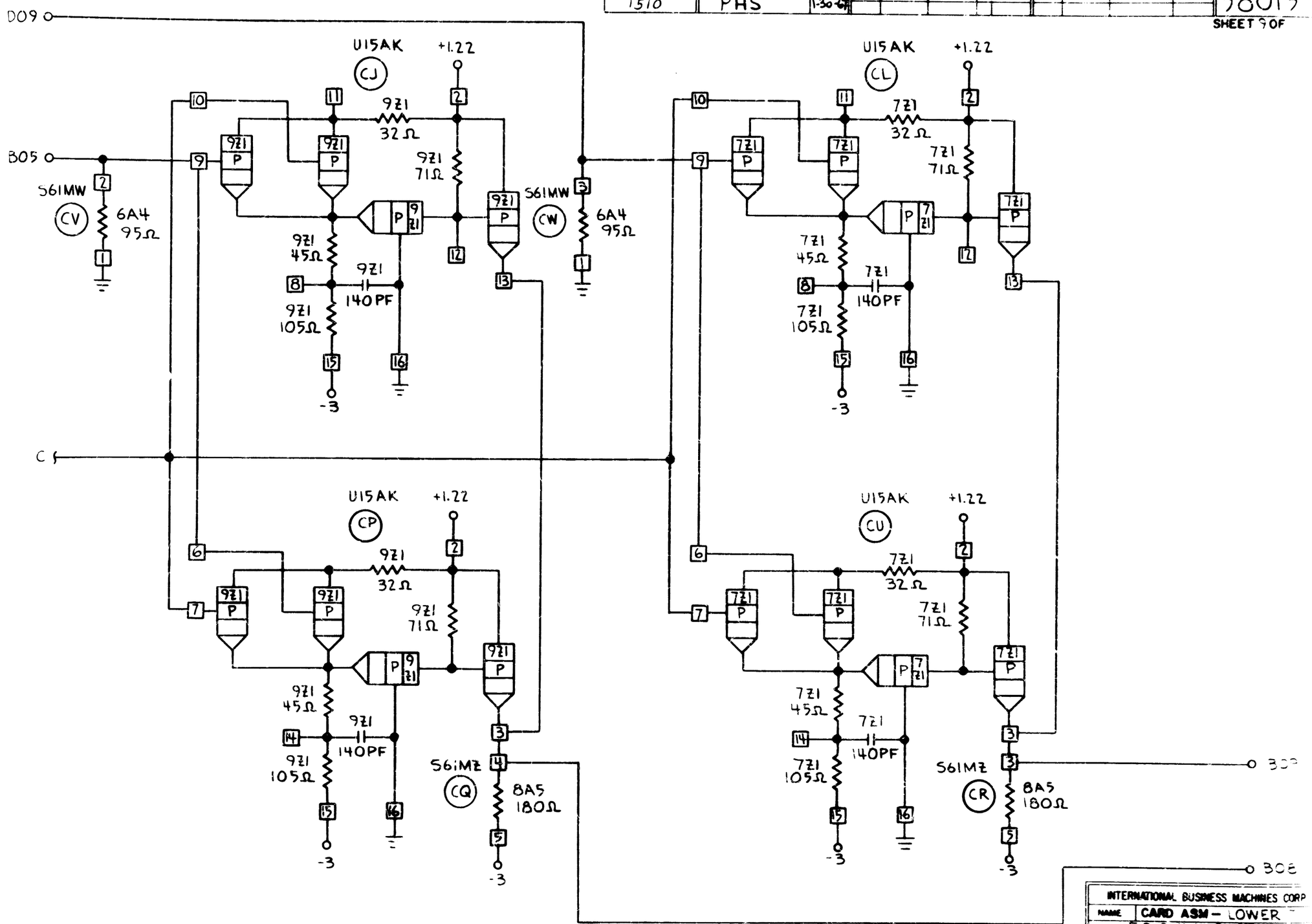

INTERNATIONAL BUSINESS MACHINES CORP

NAME	CARD ASM – LOWER 50 OHM SYSTEM			
DESIGN	NPB	28SEP66	TYPE	
DETAIL	CFC	26JAN67	SCALE	NONE
CHECK	RPV	2FEB67	DRAW	CDA
APPRO	PHS	2FEB67	CHECK	

58015 C