FORM 2-7045-6 (8-63)

STANDARDS CODE	CIRCUIT AND PACKAGING STANDARD		SYM	DATE	CHANGE NO	TECH APPRO	SYM	DATE	CHANGE NO	TECH APPRO	DEVELOPMENT NO	Q/M
2-7045				4-11-67	169743 A							
CARD CODE	APPROVAL	DATE		6JUN68	174535 B							
1510	PHS	1-30-67									5801510	

SHEET 11 OF

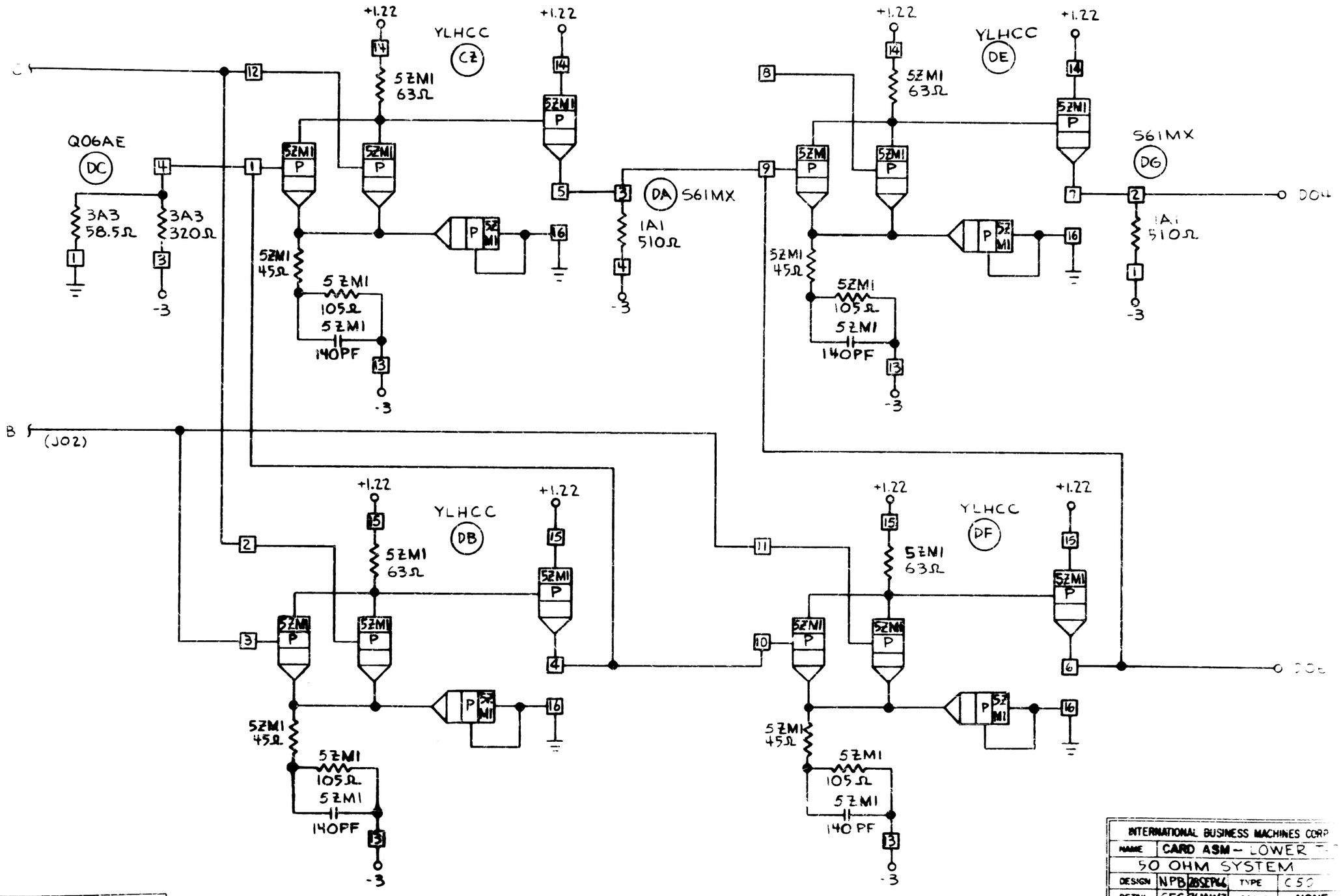

INTERNATIONAL BUSINESS MACHINES CORP				
NAME	CARD ASM – LOWER			
50 OHM SYSTEM				
DESIGN	NPB 28SEP66	TYPE	C50	
DETAIL	CFC 26JAN67	SCALE	NONE	
CHECK	RPV 2FEB67	DRAW	CDA	
APPRO	PHS 2FEB67	CHECK		

5801510 C