FORM 2-7045-8 (9-63)

STANDARDS CODE	CIRCUIT AND PACKAGING STANDARD		SYM	DATE	CHANGE NO	TECH APPRO	SYM	DATE	CHANGE NO	TECH APPRO	DEVELOPMENT NO	Q/M
2-7045				8APR67	16	A						
CARD CODE	APPROVAL	DATE										
1513	P.H.S.	18APR67									5801513	

SHEET 4 OF 10

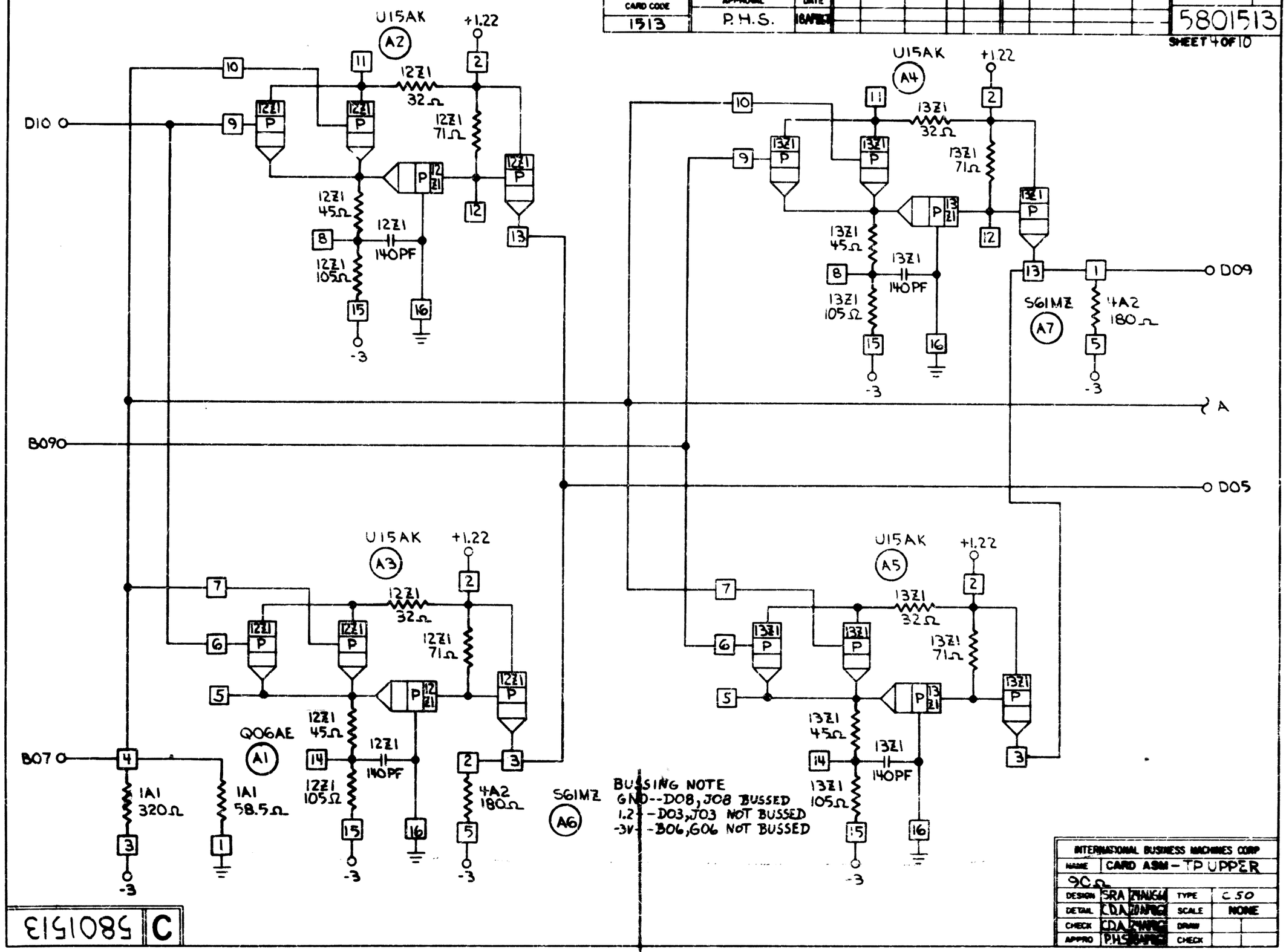

INTERNATIONAL BUSINESS MACHINES CORP				
NAME	CARD ASM - TP UPPER 90Ω			
DESIGN	SRA	TYPE	C 50	
DETAIL	CDA	SCALE	NONE	
CHECK	CDA	DRAW		
APPRO	P.H.S.	CHECK		

C 5801513