FORM 2-7046-6 (9-63)

| STANDARDS CODE | CIRCUIT AND PACKAGING STANDARD | | SYM | DATE | CHANGE NO | TECH APPRO | SYM | DATE | CHANGE NO | TECH APPRO | DEVELOPMENT NO | G/M |
|---|---|---|---|---|---|---|---|---|---|---|---|---|
| 2-7046 | | | | 18APR67 | 169756 | A | | | | | | |
| CARD CODE | APPROVAL | DATE | | | | | | | | | | |
| 1513 | P.H.S. | 18APR67 | | | | | | | | | 5801513 | |

SHEET 6 OF 10

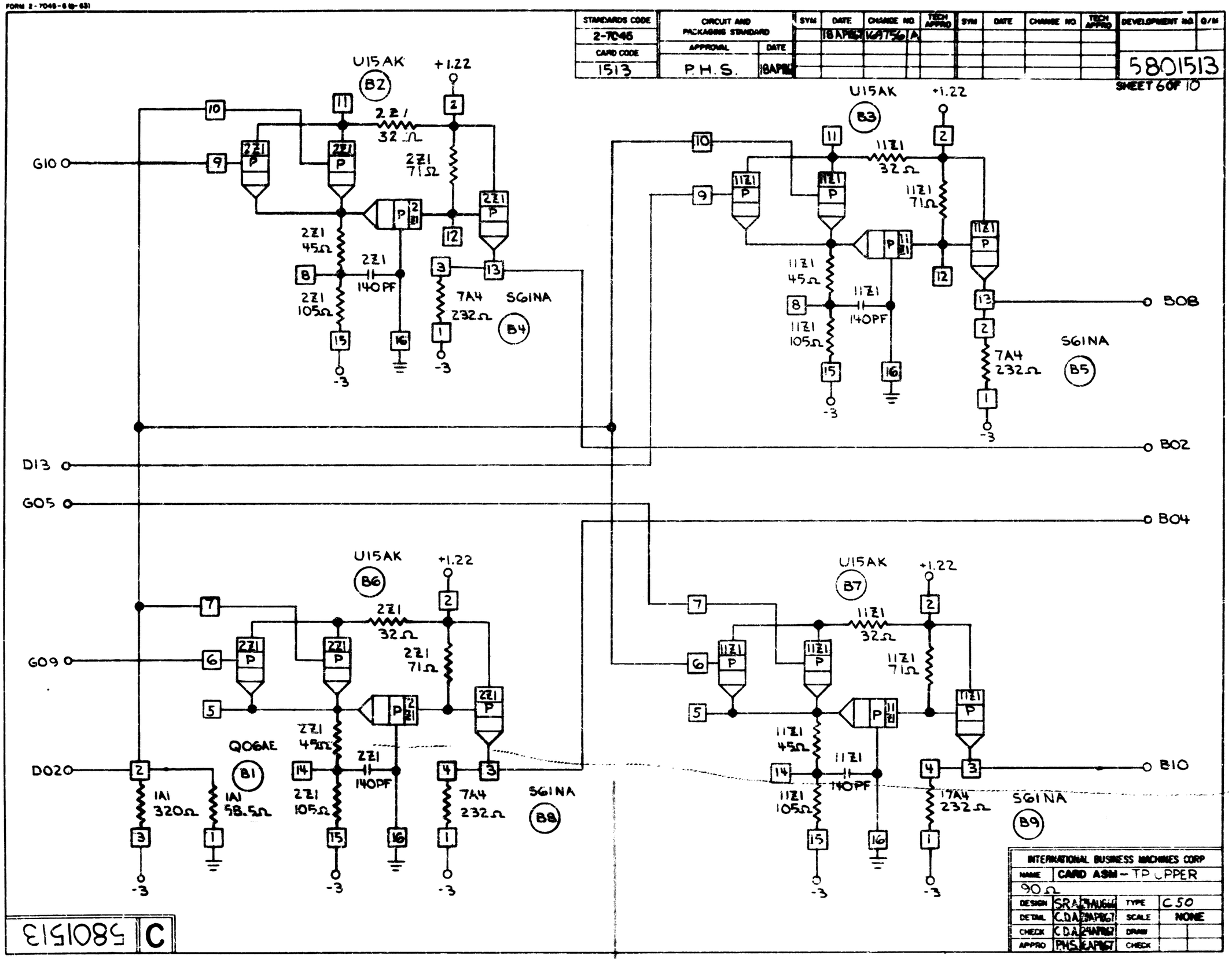


| INTERNATIONAL BUSINESS MACHINES CORP | | | | | |
|---|---|---|---|---|---|
| NAME | CARD ASM – TP UPPER | | | | |
| 90Ω | | | | | |
| DESIGN | SRA | 7AUG67 | TYPE | C 50 | |
| DETAIL | C.D.A. | 24APR67 | SCALE | NONE | |
| CHECK | C.D.A. | 24APR67 | DRAW | | |
| APPRO | PHS | 24APR67 | CHECK | | |

5801513 C