FORM 2-7045-0 (9-63)

STANDARDS CODE	CIRCUIT AND PACKAGING STANDARD		SYM	DATE	CHANGE NO	TECH APPRO	SYM	DATE	CHANGE NO	TECH APPRO	DEVELOPMENT NO	G/M
2-7045				[redacted]	67	5715	A					
CARD CODE	APPROVAL	DATE									5801513	
1513	PHS	[redacted]										

SHEET 7 OF 10

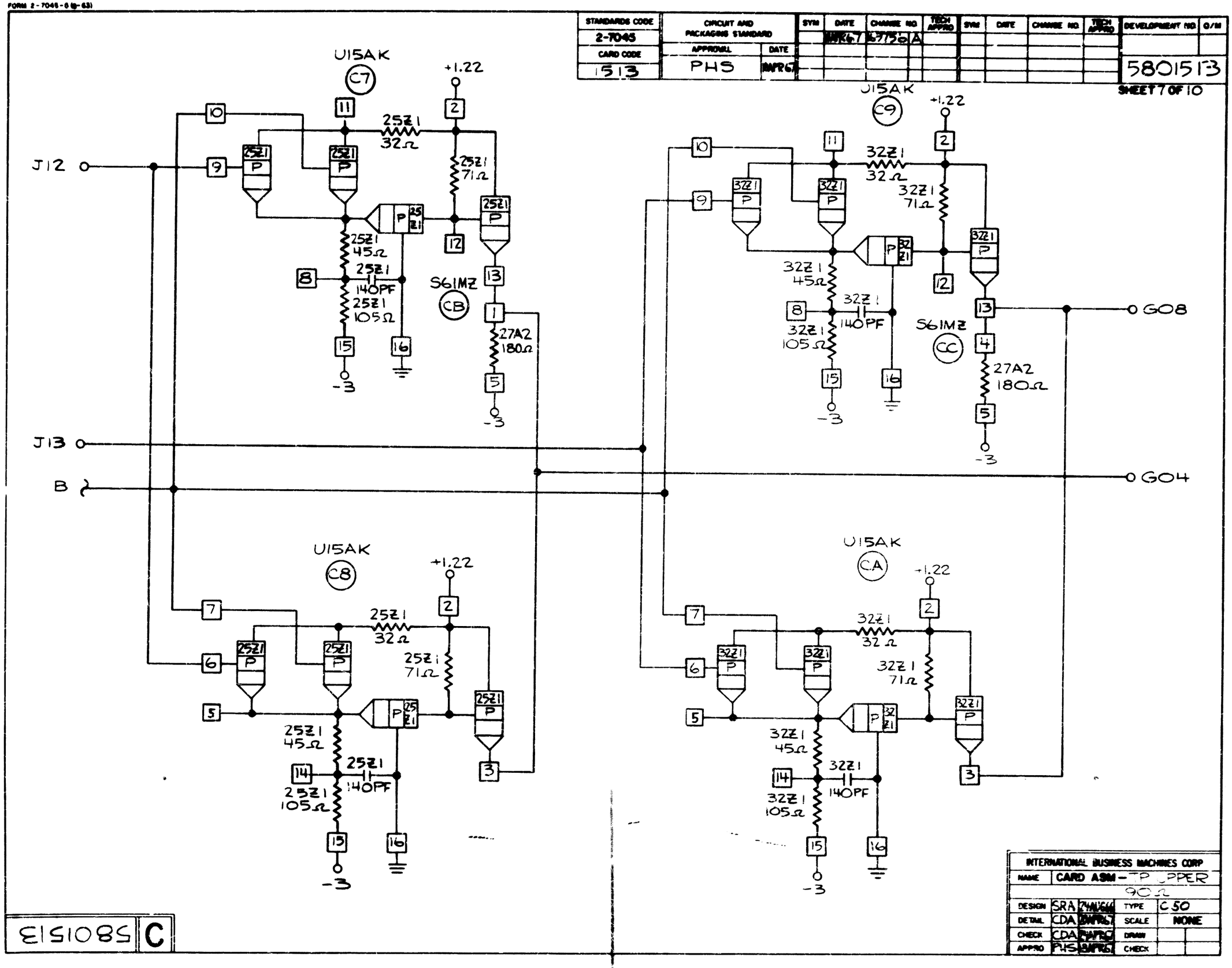

INTERNATIONAL BUSINESS MACHINES CORP				
NAME	CARD ASM - TP UPPER			
DESIGN	SRA	[redacted]	TYPE	C 50
DETAIL	CDA	[redacted]	SCALE	NONE
CHECK	CDA	[redacted]	DRAW	
APPRO	PHS	[redacted]	CHECK	

5801513 C