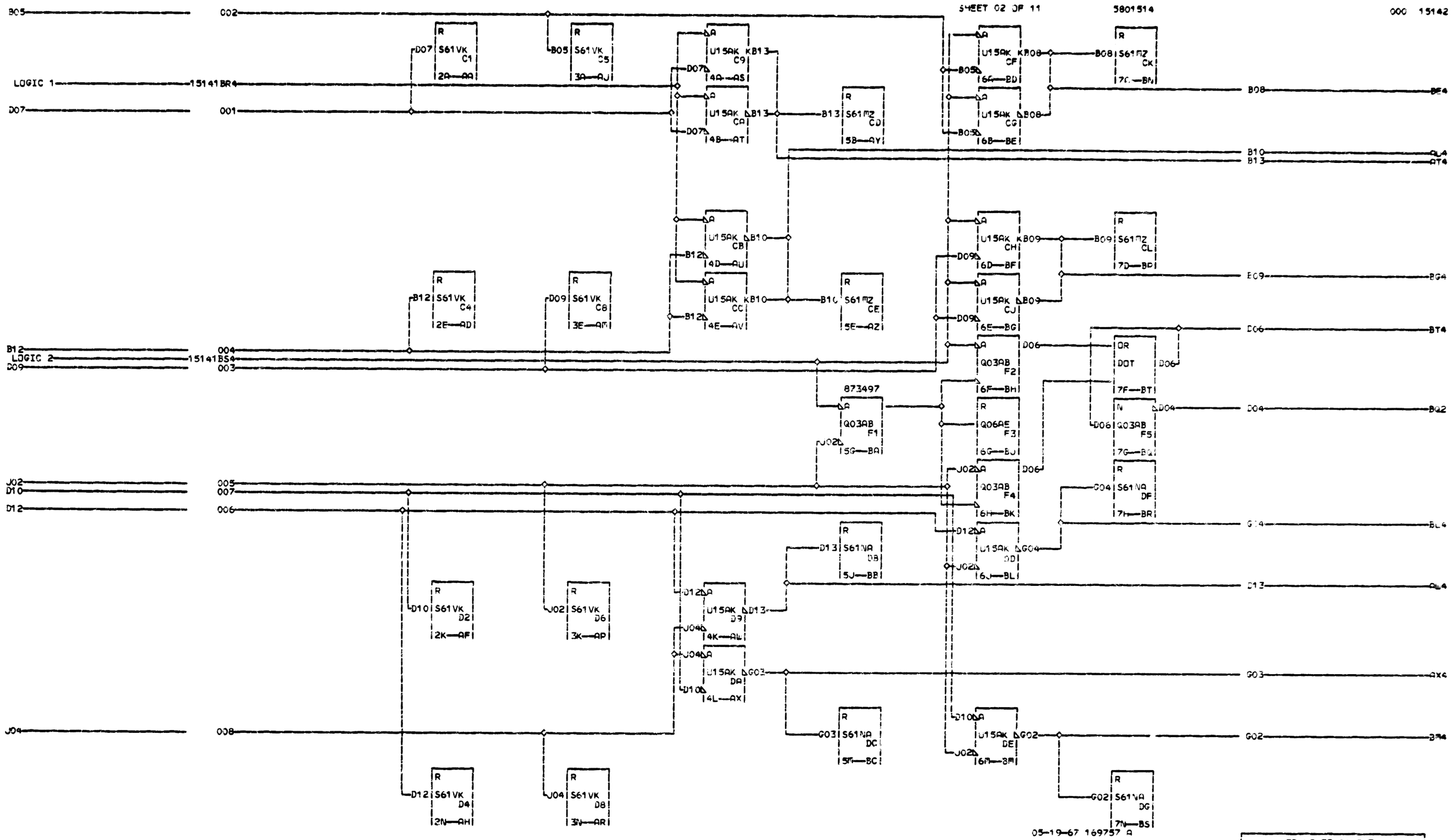

TP LOWER 90 OHM
DATE 05-11-67 MACH. ASSEMBLY
LOG FRAME
CD PG 2 OF 2 P.N. 5801514
IBM CORP. DM BLK. BL

1 5 1 4 2 000