FORM 2-7045-6 (8-63)

STANDARDS CODE	CIRCUIT AND PACKAGING STANDARD		SYM	DATE	CHANGE NO	TECH APPRO	SYM	DATE	CHANGE NO	TECH APPRO	DEVELOPMENT NO	Q/M
2-7045				17APR67	169757A							
CARD CODE	APPROVAL	DATE										
1514	PHS	17APR67									5801514	

SHEET 1 OF 11

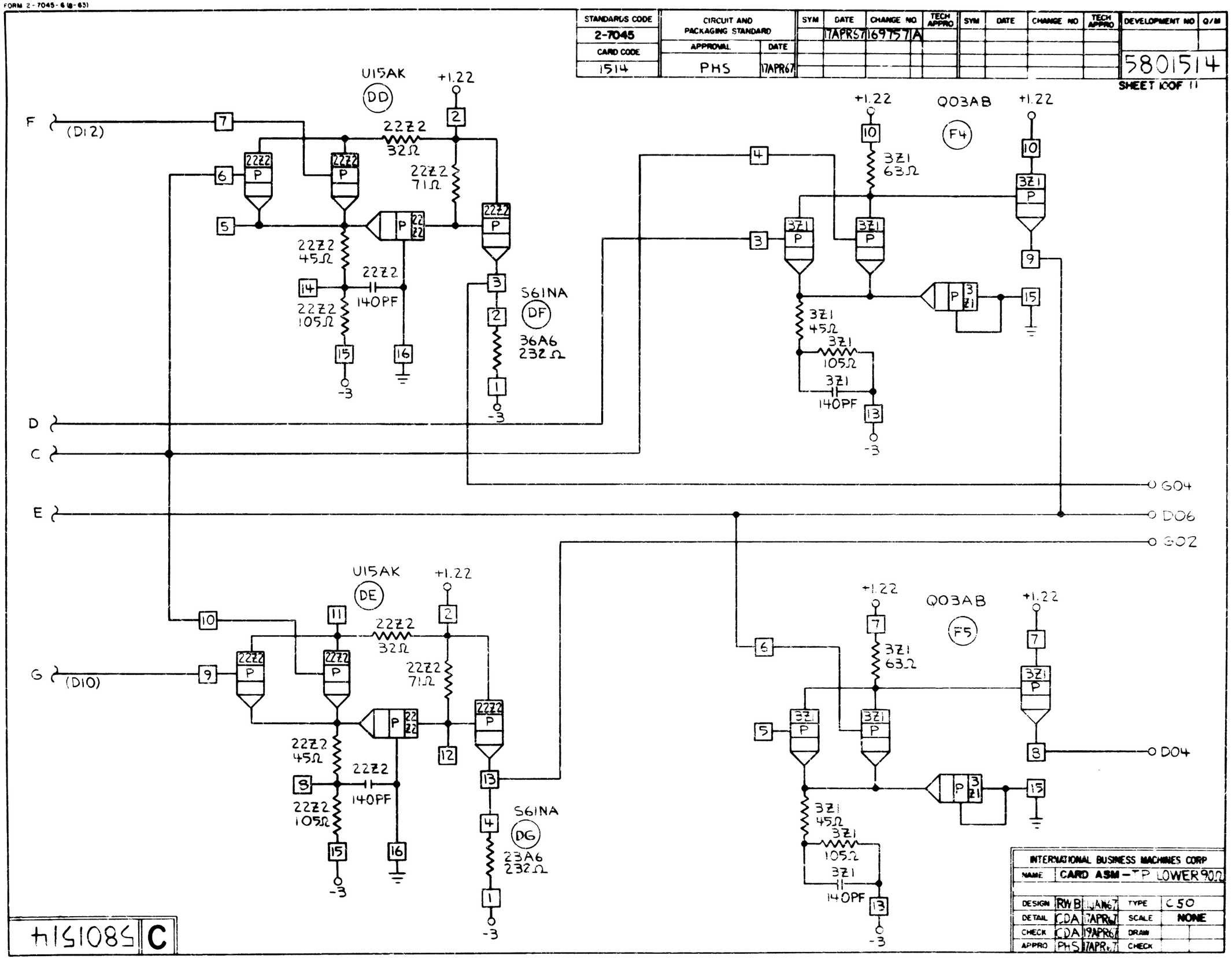

INTERNATIONAL BUSINESS MACHINES CORP				
NAME	CARD ASM-TP LOWER 90Ω			
DESIGN	RWB	1JAN67	TYPE	C50
DETAIL	CDA	17APR67	SCALE	NONE
CHECK	CDA	19APR67	DRAW	
APPRO	PHS	17APR67	CHECK	

5801514 C