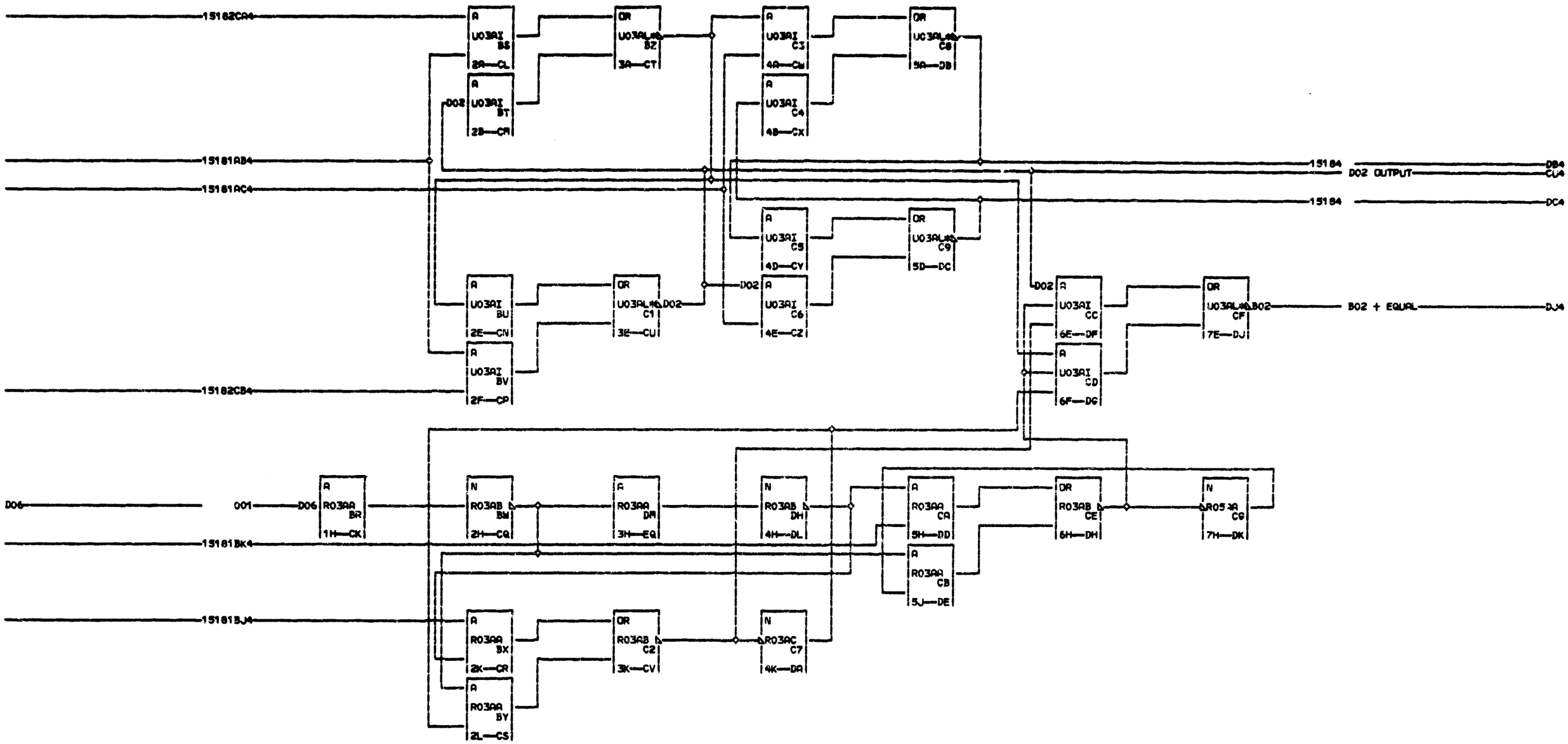

07-25-67 171637 A
02-12-68 173261 B

1
5
1
8
3
000

ADVANCED PROGRAM MONITOR
DATE 02-20-68 MACH. ASSEMBLY
LOG 186 FRAME
CD PG 3 OF 4 P.N. 5801518
IBM CORP. PD BLK. ER

1
5
1
8
3
000