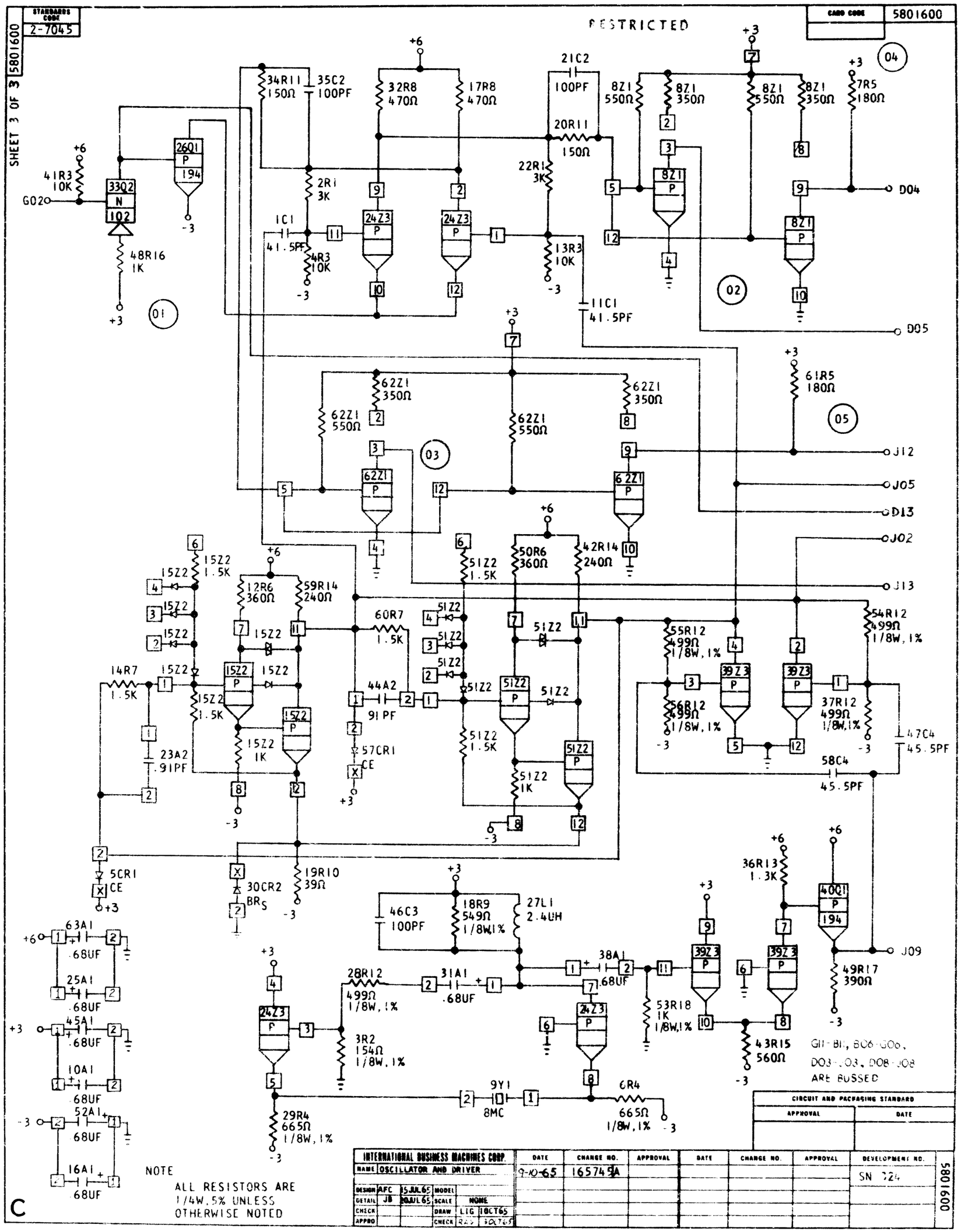
STANDARDS CODE 2-7045
SHEET 3 OF 3 5801600
RESTRICTED
CARD CODE 5801600
34R11 150Ω
35C2 100PF
32R8 470Ω
17R8 470Ω
21C2 100PF
20R11 150Ω
22R1 3K
8Z1 550Ω
8Z1 350Ω
7R5 180Ω
41R3 10K
G02
48R16 1K
2R1 3K
1C1 41.5PF
4R3 10K
13R3 10K
11C1 41.5PF
D04
D05
62Z1 350Ω
62Z1 550Ω
61R5 180Ω
J12
J05
D13
J02
J13
15Z2 1.5K
12R6 360Ω
59R14 240Ω
60R7 1.5K
51Z2 1.5K
50R6 360Ω
42R14 240Ω
55R12 499Ω 1/8W,1%
54R12 499Ω 1/8W,1%
56R12 499Ω 1/8W,1%
37R12 499Ω 1/8W,1%
14R7 1.5K
23A2 .91PF
44A2 91PF
57CR1 CE
47C4 45.5PF
58C4 45.5PF
5CR1 CE
30CR2 BRS
19R10 39Ω
46C3 100PF
18R9 549Ω 1/8W,1%
27L1 2.4UH
36R13 1.3K
49R17 390Ω
J09
28R12 499Ω 1/8W,1%
31A1 .68UF
38A1 .68UF
53R18 1K 1/8W,1%
43R15 560Ω
3R2 154Ω 1/8W,1%
9Y1 8MC
6R4 665Ω 1/8W,1%
29R4 665Ω 1/8W,1%
63A1 .68UF
25A1 .68UF
45A1 .68UF
10A1 .68UF
52A1 .68UF
16A1 .68UF
G11-B11, B06-G06, D03-J03, D08-J08 ARE BUSSED
CIRCUIT AND PACKAGING STANDARD
APPROVAL
DATE
NOTE
ALL RESISTORS ARE 1/4W,5% UNLESS OTHERWISE NOTED
C
INTERNATIONAL BUSINESS MACHINES CORP.
NAME OSCILLATOR AND DRIVER
DESIGN AFC 15JUL65
DETAIL JB 20JUL65
CHECK
APPRO
MODEL
SCALE NONE
DRAW LIG 18CT65
CHECK RAV 30CT65
DATE 9-10-65
CHANGE NO. 1657454
APPROVAL
DATE
CHANGE NO.
APPROVAL
DEVELOPMENT NO. SN 724
5801600