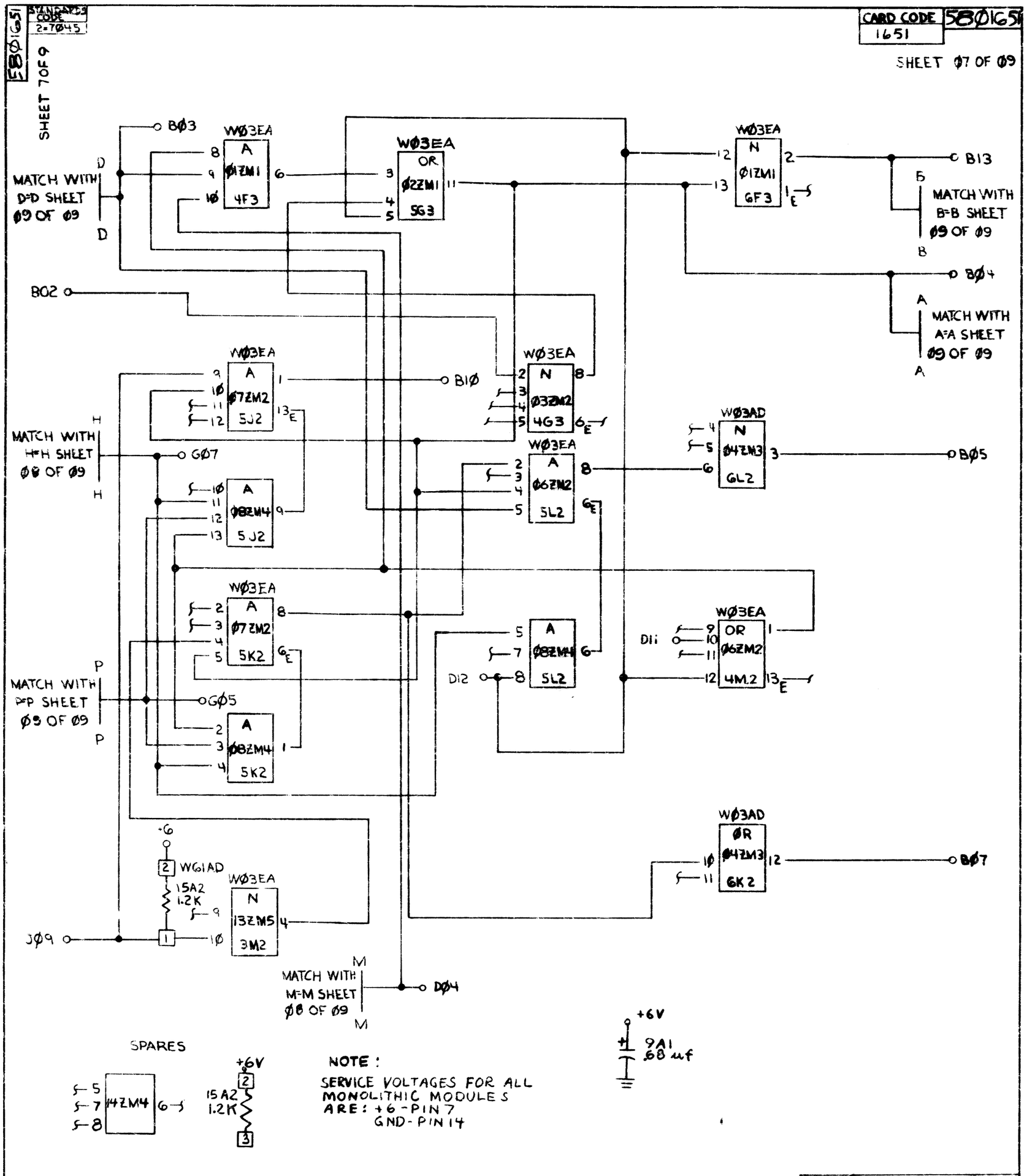

J08 - D08 ARE BUSSED
B11 - G11 ARE NOT BUSSED

CIRCUIT & PACKAGING STANDARD	
APPROVAL	DATE
	8-31-65

| INTERNATIONAL BUSINESS MACHINES CORP. | | |