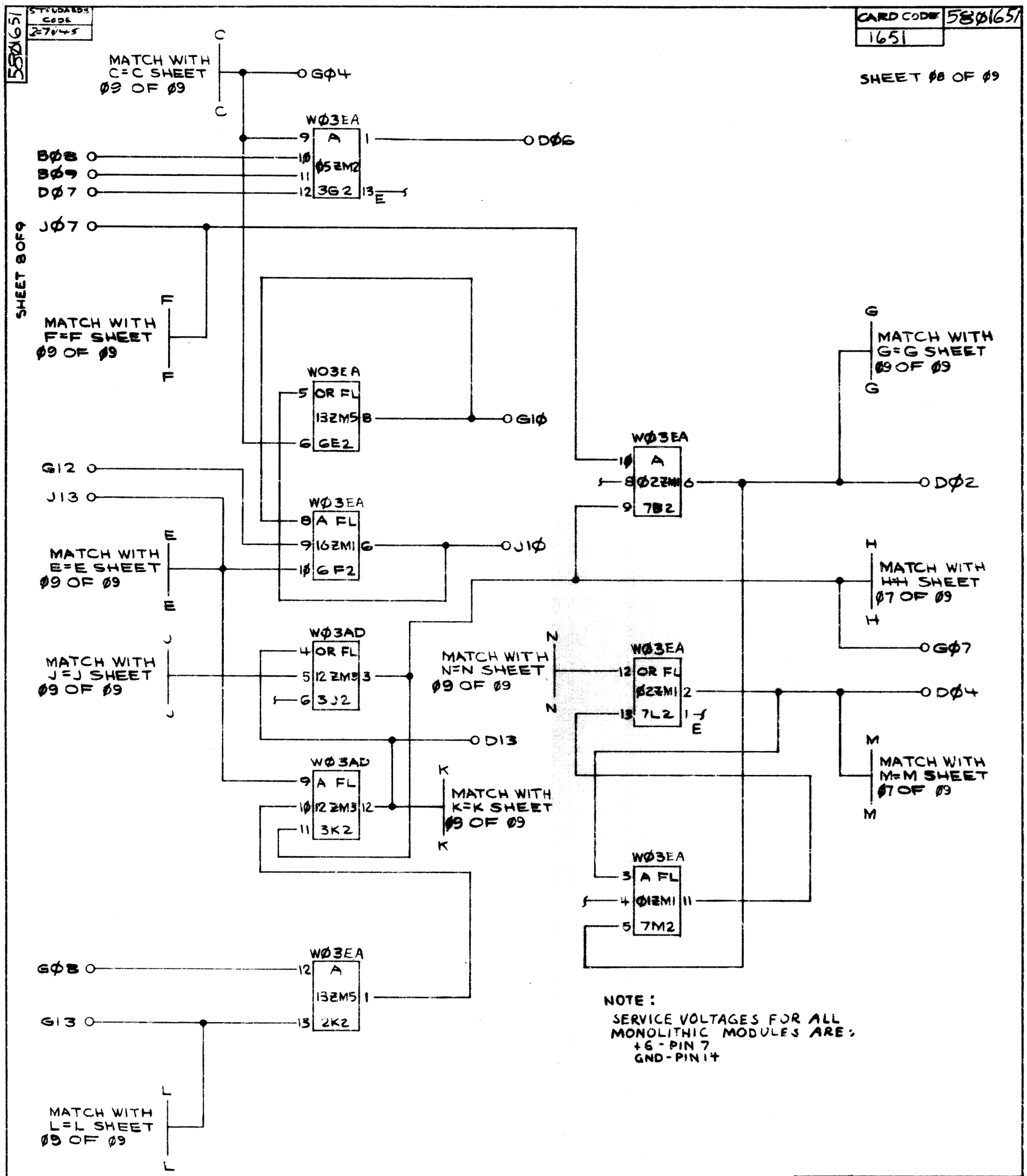

NOTE:
SERVICE VOLTAGES FOR ALL MONOLITHIC MODULES ARE:
+6 - PIN 7
GND - PIN 14

CIRCUIT & PACKAGING STANDARD	
APPROVAL	DATE
J E Shaw	8-31-65

| INTERNATIONAL BUSINESS MACHINES CORP. | | |